FORM 150.63-EG4 (1012)

YORK®

BY JOHNSON CONTROLS

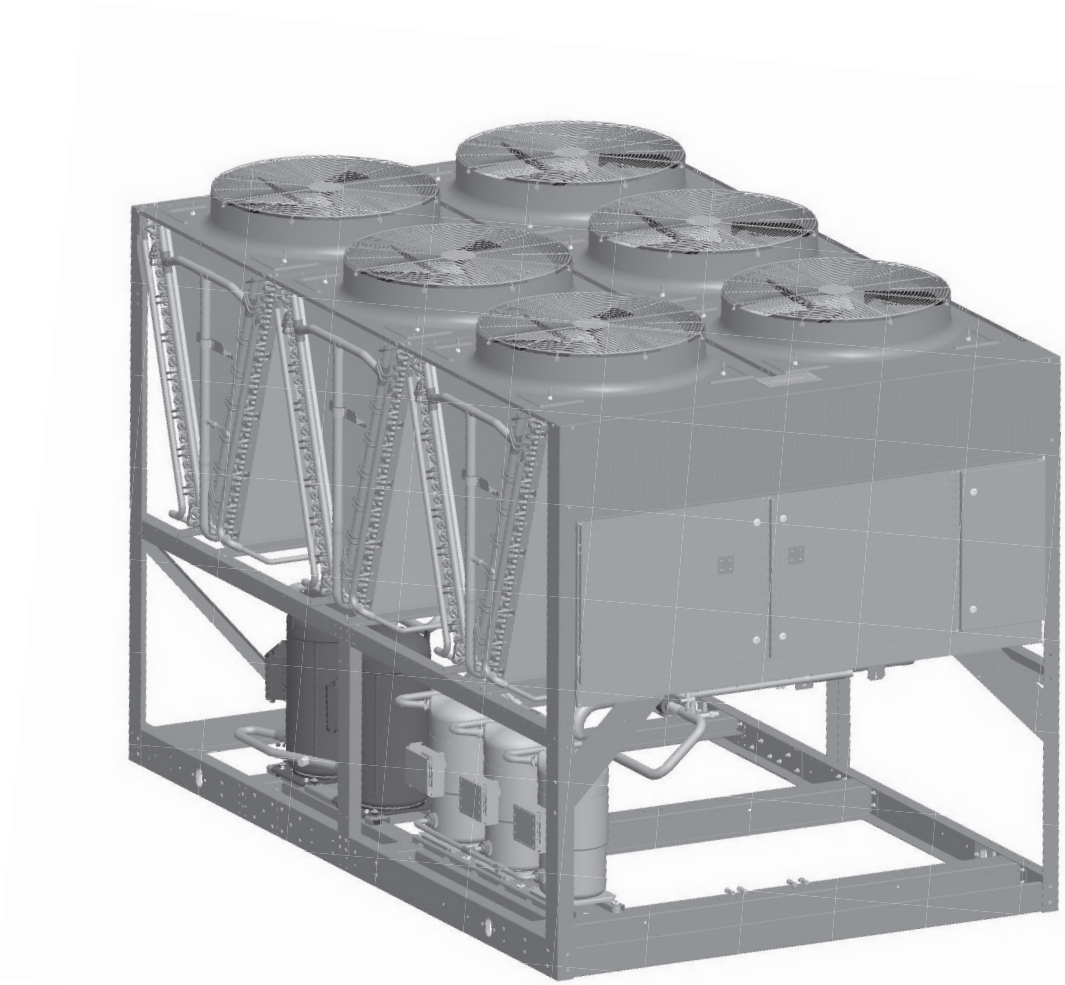

Model YLUA Air-Cooled Scroll Compressor Condensing Units Style A

70 – 135 TON
245 – 475 kW
R-410A
50 Hz

Table of Contents

Introduction 3
Unit Overview 4
Microcomputer Control Center 5
Accessories and Options 7
Selection Data 9
Ratings 50Hz English 14
Ratings 50Hz SI 20
Part Load Ratings 23
Physical Data 24
Dimension Drawings 25
Isolator Details 28
Isolator Locations 31
Electrical Notes 33
Electrical Data 34
Electrical Drawings 36
Application Data 46
Guide Specifications 47

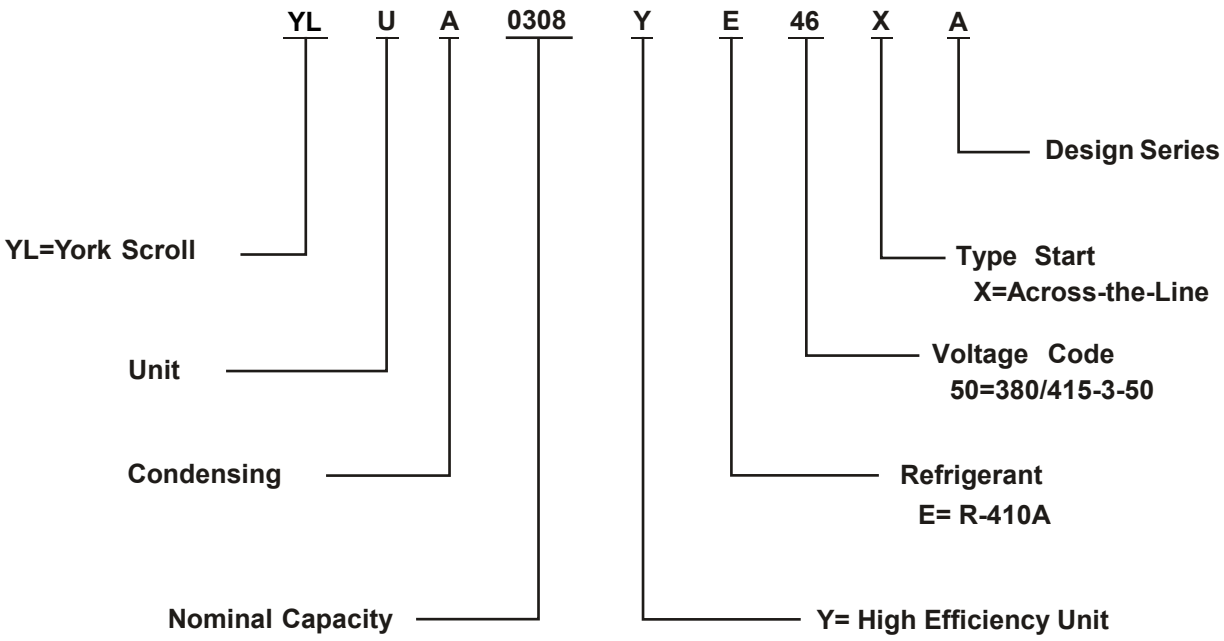

ISO 9001 Registered

Products are produced at a facility whose quality-management systems are ISO9001 certified.

INTERTEK ETL CM LISTED C US

Introduction

Model YLUA Air-Cooled Scroll Compressor Condensing Units Style A

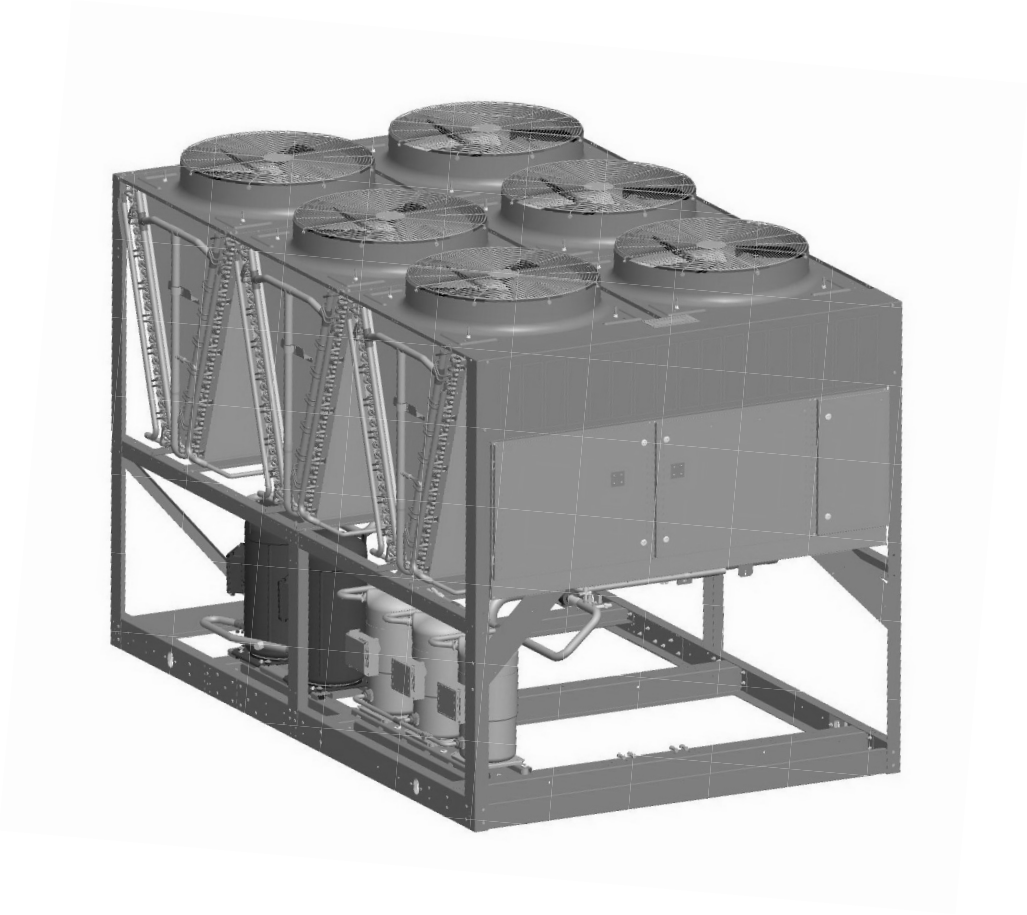

YORK Air-Cooled Scroll Condensing Units are the perfect refrigeration components for all air conditioning applications that use DX central station air handling. They are designed for outdoor (roof or ground level) installation. Each unit includes hermetic scroll compressors, air cooled condensers, and a weather resistant microprocessor control center, all mounted on a formed steel base.

Unit Overview

GENERAL

The 68-135 Ton (238 - 473 kW) YLUA Condensing Unit Models are shipped complete from the factory ready for field installation.

The unit is pressure-tested, evacuated and given a nitrogen holding charge and includes an initial oil charge (R-410A refrigerant supplied by others). After assembly, a operational test is performed to assure that each control device operates correctly.

The unit structure is heavy-gauge, galvanized steel. This galvanized steel is coated with baked-on powder paint, which, when subjected to ASTM B117 1000 hour, salt spray testing, yields a minimum ASTM 1654 rating of “6”. Units are designed in accordance with NFPA 70 (National Electric Code), ASHRAE/ANSI 15 Safety code for mechanical refrigeration, and are cETL listed. All units are produced at an ISO 9000-registered facility.

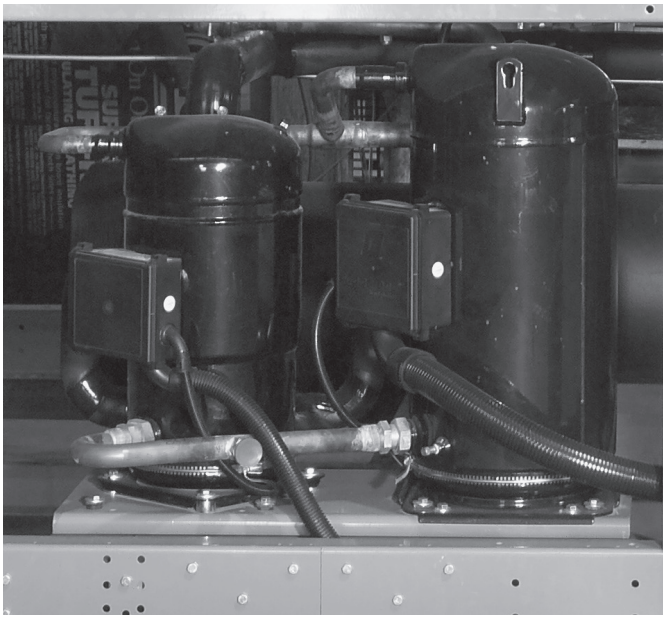

COMPRESSORS

The chiller has suction-gas cooled, hermetic, scroll compressors. The compressors incorporate a compliant scroll design in both the axial and radial direction. All rotating parts of the compressors are statically and dynamically balanced. A large internal volume and oil reservoir provides greater liquid tolerance. Compressor crankcase heaters are also included for extra protection against liquid migration.

CONDENSER

Coils – Fin and tube condenser coils of seamless, internally-enhanced, high-condensing-coefficient, corrosion resistant copper tubes are arranged in staggered rows, mechanically expanded into aluminum fins. Integral subcooling is included. The design working pressure of the coil is 650 psig (45 barg).

Fans – The condenser fans are composed of corrosion-resistant aluminum hub and glass-fiber-reinforced polypropylene composite blades molded into a low noise airfoil section. The are designed for maximum efficiency and are statically and dynamically balanced for vibration free operation. They are directly driven by independent motors, and positioned for vertical air discharge. The fan guards are constructed of heavy-gauge, rust-resistant, coated steel. All blades are statically and dynamically balanced for vibration-free operation.

Motors – The fan motors are Totally Enclosed Air-Over, squirrel-cage type, current protected. They feature ball bearings that are double-sealed and permanently lubricated.

REFRIGERANT CIRCUIT

Two independent refrigerant circuits will be furnished on each unit. All unit piping will be copper, with brazed joints. The liquid line will include a field connection shutoff valve with charging port located on each condenser circuit. Suction line connections are provided on each refrigeration circuit. A filter drier and sight glass are shipped loose for field installation on each refrigerant circuit.

All expansion valves, liquid line solenoid valves, refrigerant, and refrigerant field piping are supplied by others.

Microcomputer Control Center

All controls are contained in a NEMA 3R cabinet with hinged and gasketed outer door and includes:

Liquid Crystal Display with Light Emitting Diode backlighting for outdoor viewing:

- Two display lines
- Twenty characters per line

Color coded 12-button non-tactile keypad with sections for:

DISPLAY/PRINT of typical information:

- Suction temperatures (optional)
- Ambient temperature
- System pressures (each circuit)
- Operating hours and starts (each compressor)
- Print calls up to the liquid crystal display:
- Operating data for the systems
- History of fault shutdown data for up to the last six fault shutdown conditions

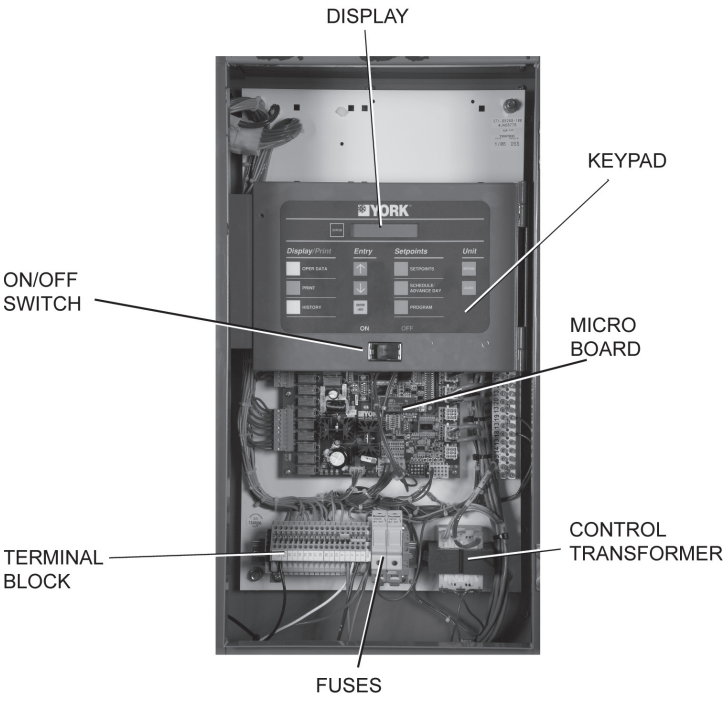

FIG.1 – CONTROL PANEL COMPONENTS

- An RS-232 port, in conjunction with this press-to-print button, is provided to permit the capability of hard copy print-outs via a separate printer (by others).

ENTRY section to:

- **ENTER** setpoints or modify system values **SETPOINTS** updating can be performed to:
- Suction pressure setting
- Suction pressure control zone
- Remote reset temperature range
- Set daily schedule/holiday for start/stop
- Manual override for servicing
- Low and high ambient cutouts
- Number of compressors
- Low suction pressure cutout
- High discharge pressure cutout
- Anti-recycle timer (compressor start cycle time)
- Anti-coincident timer (delay compressor starts)

UNIT section to:

- Set clock
- Set options
- Set unit option

Set unit control for Discharge Air Temperature Control or for Suction Pressure Control (requires Suction Pressure Transducers – standard.

UNIT ON/OFF switch
The microprocessor control center is capable of displaying the following:

- Suction temperatures (optional)
- Low ambient temperature cutout setting
- Outdoor air temperature
- English or Metric data
- Suction pressure cutout setting
- Each system suction pressure
- System discharge pressure

Microcomputer Control Center - continued

- Discharge Air Temperature Reset via a YORK ISN DDC or Building Automation System (by oth ers) via:
  - a pulse width modulated (PWM) input as standard
  - a 4-20 milliamp or 0 -10 VDC input, or contact closure with the optional B.A.S. interface option
- Anti-recycle timer status for each system
- Anti-coincident system start timer condition
- Compressor run status
- No cooling load condition
- Day, date and time
- Daily start/stop times
- Holiday status
- Automatic or manual system lead/lag control (Discharge Air Temperature control only)
- Automatic lead/lag of compressors within a system
- Compressor starts & operating hours (each compressor)
- Status of hot gas valves, and fan operation
- Run permissive status
- Number of compressors running
- Liquid solenoid valve status
- Load & unload timer status

Provisions are included for: pumpdown at shutdown; optional remote discharge air temperature reset and two steps of demand load limiting from an external building automation system. Unit alarm contacts are standard.

The operating program is stored in non-volatile memory (EPROM) to eliminate chiller failure due to AC powered failure/battery discharge. Programmed setpoints are retained in lithium battery-backed RTC memory for 5 years minimum.

Ambient Kit (High) – Required if units are to operate when the ambient temperature is above 115°F (46°C). Includes sun shield panels and discharge pressure transducers. (This option includes the Discharge Pressure Transducer /Readout Capability option). (**Field mounted**).

COMMUNICATIONS

- Native communication capability for N2, BACnet (MS/TP) and Modbus
- Optional communciation available for LON via eLink option

POWER PANEL

Each panel contains:

- Compressor power terminals
- Compressor motor starting contactors per I.E.C.*
- Control power terminals to accept incoming for 115-1-60 control power
- Fan contactors & overload current protection

The power wiring is routed through liquid-tight conduit to the compressors and fans.

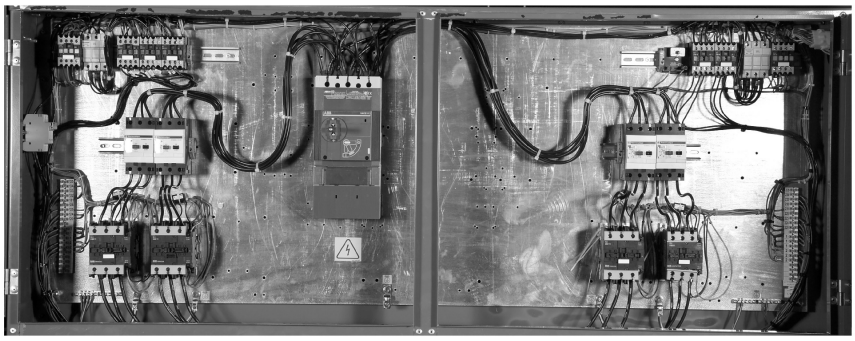

FIG. 2 – POWER PANEL

* International Electrotechnical Commission

Accessories and Options

POWER OPTIONS:

COMPRESSOR POWER CONNECTIONS – Single-point terminal block connection(s) are provided as standard. The following power connections are available as options. (See electrical data for specific voltage and options availability.) (**Factory mounted**).

SINGLE POINT NON-FUSED DISCONNECT SWITCH – Unit-mounted disconnect switch(es) with external, lockable handle (in compliance with Article 440-14 of N.E.C.), can be supplied to isolate the unit power voltage for servicing. Separate external fusing must be supplied, by others in the power wiring, which must comply with the National Electrical Code and/or local codes.

SINGLE POINT NON-FUSED DISCONNECT SWITCH WITH INDIVIDUAL SYSTEM BREAKERS - Includes unit-mounted disconnect switch with external, lockable handles (in compliance with Article 440-14 of N.E.C.) to isolate unit power voltage for servicing. Factory interconnecting wiring is provided from the disconnect switch to factory supplied system circuit breakers.

SINGLE POINT CIRCUIT BREAKER – (A unit mounted circuit breaker with external, lockable handle (in compliance with N.E.C. Article 440-14), can be supplied to isolate the power voltage for servicing. (This option includes the Single-Point Power connection.)

CONTROL TRANSFORMER – Converts unit power voltage to 115-1-60 (0.5 or 1.0 kVA capacity). Factory mounting includes primary- and secondary-wiring between the transformer and the control panel. (**Factory mounted**).

POWER FACTOR CORRECTION CAPACITORS – Will correct unit compressor power factors to a 0.90-0.95. (**Factory mounted**).

CONTROL OPTIONS:

AMBIENT KIT (LOW) –Units will operate to (standard) 32°F (-4°C). This accessory includes all necessary components to permit condensing unit operation to 0°F (-18°C). (This option includes the Discharge Pressure Transducer / Readout Capability option.) For proper head pressure control in applications below 25°F (-4°C) where wind gusts may exceed 5 mph (8 km/h), it is recommended that Optional Condenser Louvered Enclosure Panels also be included. (**Factory mounted**).

BUILDING AUTOMATION SYSTEM INTERFACE – The factory addition of a Printed Circuit Board to accept a 4-20 milliamp, 0-10VDC or contact closure input to reset the discharge air temperature from a Building Automation System. (**Factory Mounted**). (The standard control panel can be directly connected to a YORK Building Automated System via the standard on board RS485 communication port.)

LANGUAGE LCD AND KEYPAD DISPLAY – Spanish, French, German, and Italian unit LCD controls and keypad display available. Standard language is English.

DISCHARGE PRESSURE TRANSDUCERS AND READ-OUT CAPABILITY – the addition of pressure transducers allows models to sense and display discharge pressure. (This option as included with either the low or high ambient kits). (**Factory mounted**).

SUCTION PRESSURE TRANSDUCERS AND READ-OUT CAPABILITY – The addition of suction transducers allows models to sense and display suction pressure. (**Factory mounted**).

SUCTION TEMPERATURE READOUT – The addition of temperature sensors allow models to sense and display suction temperature. (**Factory mounted**).

MOTOR CURRENT MODULE – Capable of monitoring compressor motor current. Provides extra protection against compressor reverse rotation, phase-loss and phase imbalance. Option consists of one module per electrical system. (**Factory mounted**).

COMPRESSOR AND PIPING OPTIONS:

CHICAGO CODE RELIEF VALVES – Unit will be provided with relief valves to meet Chicago code requirements. (**Factory mounted, 60Hz only**).

HOT GAS BY-PASS – Permits continuous, stable operation at capacities below the minimum step of compressor unloading to as low as 5% capacity (depending on both the unit and operating conditions) by introducing an artificial load. Hot gas by-pass is installed on only refrigerant system #1 on two circuited units. (**Factory mounted**).

SERVICE ISOLATION VALVE – Service suction and discharge (ball type) isolation valves are added to unit per system. This option also includes a system high pressure relief valve in compliance with ASHRAE 15. (Factory mounted).

CONDENSER AND CABINET OPTIONS:

Condenser coil protection against corrosive environments is available by choosing any of the following options. For additional application recommendations, refer to FORM 150.12-ES1. (**Factory mounted**).

Accessories and Options - continued

PRE-COATED FIN CONDENSER COILS – The air-cooled condenser coils are constructed of black epoxy-coated aluminum fins. This can provide corrosion resistance comparable to copper-fin coils in typical seashore locations. Either these or the post-coated coils (below), are recommended for units being installed at the seashore or where salt spray may hit the unit.

POST-COATED DIPPED CONDENSER COILS – The unit is built with dipped and cured condenser coils. This is another choice for seashore and other corrosive applications (with the exception of strong alkalies, oxidizers and wet bromine, chlorine and fluorine in concentrations greater than 100 ppm).

COPPER-FIN CONDENSER COILS – The unit constructed with condenser coils which have copper fins. (This is not recommended for units in areas where they may be exposed to acid rain).

ENCLOSURE PANELS (UNIT) – Tamperproof Enclosure Panels prevent unauthorized access to units. Enclosure Panels can provide an aesthetically pleasing alternative to expensive fencing. Additionally, for proper head pressure control, Johnson Controls recommends the use of Condenser Louvered Panels for winter applications where wind gusts may exceed five miles per hour.

The following types of enclosure panels are available:

WIRE PANELS (FULL UNIT) – Consists of welded-wire-mesh guards mounted on the exterior of the unit. Prevents unauthorized access, yet provides free air flow. (**Factory mounted**).

WIRE/LOUVERED PANELS – Consists of welded-wire-mesh panels on the bottom part of unit and louvered panels on the condenser section of the unit. (**Factory mounted**).

LOUVERED PANELS (CONDENSER COIL ONLY) – Louvered panels are mounted on the sides and ends of the condenser coils for protection. (**Factory mounted**).

LOUVERED PANELS (FULL UNIT) – Louvered panels surround the front, back, and sides of the unit. These prevent unauthorized access and visually screen unit components. Unrestricted air flow is permitted through generously sized louvered openings. This option is applicable for any outdoor design ambient temperature up to 115°F (46°C). (**Factory mounted**).

SOUND ATTENUATION – One or both of the following sound attenuation options are recommended for residential or other similar sound sensitive locations:

COMPRESSOR ACOUSTIC SOUND BLANKET – Each compressor is individually enclosed by an acoustic sound blanket. The sound blankets are made with one layer of acoustical absorbent textile fiber of 5/8” (15mm) thickness; one layer of anti-vibrating heavy material thickness of 1/8” (3mm). Both are closed by two sheets of welded PVC, reinforced for temperature and UV resistance. (**Factory mounted**).

ULTRA QUIET FANS – Lower RPM, 8-pole fan motors are used with steeper-pitch fans. (**Factory mounted**).

VIBRATION ISOLATORS – Level adjusting, spring type 1” (25.4mm) or 2” (50.8mm) deflection or neoprene pad isolators for mounting under unit base rails. (**Factory mounted**).

Selection Data

The ratings shown on pages 12 through 17 are based on unit operation in a well designed and properly piped system.

SELECTION RULES

1. Capabilities are based on Refrigerant R-410A.

2. Ratings may be interpolated, but must not be extrapolated.

3. Ratings shown are at saturated suction temperatures corresponding to pressures at the compressor. In actual practice, suction line pressure drop has the effect of reducing compressor capacity, forcing the compressor to operate at a lower suction pressure to maintain the desired evaporator temperature.

For normal air conditioning applications, siYE the suction line for a pressure drop of 3 PSI, corresponding to 2°F, for R-410A refrigerant. Thus, the evaporator temperature will be approximately 2°F higher than the compressor suction temperature. Line loss must be taken into consideration when selecting the evaporator.

SELECTION PROCEDURE

The air-cooled condensing unit may be selected from the Ratings on pages 12 through 17, if the ambient air temperature at the condenser and the saturated suction temperature at the compressor are known. The ambient air temperature is a known design parameter, but the suction temperature at the compressor, in many cases, is known only within certain allowable limits. The actual compressor operating suction temperature and the overall performance of the system will depend directly upon the choice of the evaporator. Starting with a preliminary evaporator selection at a nominal evaporator temperature and using data supplied by the evaporator manufacturer, enter the ratings tables and select a unit to meet the required cooling load at a suction temperature at least 2°F below the evaporator temperature. The 2°F allows for normal suction line loss.

If more accurate selection is required, the evaporator capacity should be plotted against the condensing unit capacity to determine the balanced system performance. Again, it is necessary to factor in the suction line loss.

After the system balance point has been determined, the compressor KW input may be interpolated from the ratings tables.

SAMPLE SELECTION

Select an R-410A Air-Cooled Condensing Unit with a matched central station air handling unit having the following operating conditions:

Design Conditions

1. An air handling unit with four large DX coils (two per circuit) having a total cooling load of 1320 MBH (110 tons).
2. The coil suction temperature required 7.2°C.
3. The design outdoor ambient temperature is 35°C.
4. The power supply is 400V/3∅/50 hz.

Selection

1. Enter the **YLUA0408YE** Rating Table (page 12).
2. The model **YLUA0408YE** will provide 84.1 tons with 107.9 compressor KW input at 35°C ambient air and 7.2°C suction pressure.

The **YLUA0408YE** is the suitable selection for the design capacity.

Selection Data - continued

REFRIGERANT PIPING

General – When the unit has been located in its final position, the unit piping may be connected. Normal installation precautions should be observed in order to receive maximum operating efficiencies. System piping should conform to the Johnson Controls DX piping guide form 050.40-ES2 or ASHRAE refrigeration handbook guidelines. All piping design and installation is the responsibility of the user.

JOHNSON CONTROLS ASSUMES NO WARRANTY RESPONSIBILITY FOR SYSTEM OPERATION OR FAILURES DUE TO IMPROPER PIPING OR PIPING DESIGN.

Filter driers and sight glasses are shipped loose for field installation on each refrigerant circuit. Field refrigerant piping can be connected to the condensing unit.

All expansion valves, liquid line solenoid valves, refrigerant and refrigerant piping are supplied and installed by others.

Table 4 lists refrigerant line connections sizes per unit model number.

REFRIGERANT LINE SIZING

Refrigerant piping systems must be designed to provide practical line sizes without excessive pressure drops, prevent compressor oil from being “trapped” in the refrigerant piping, and ensure proper flow of liquid refrigerant to the thermal expansion valve. Considerations should be given to:

- Suction line pressure drop due to refrigerant flow.
- Suction line refrigerant velocity for oil return.
- Liquid line pressure drop due to refrigerant flow.
- Liquid line pressure drop (or gain) due to vertical rise of the liquid line.

Table 5 provides the pressure drops for given pipe sizes for both liquid and suction lines. The pressure drops given are per 100 equivalent ft. (30.5 m) of refrigerant piping. These friction losses do not include any allowances for strainer, filter drier, solenoid valve, isolation valve or fittings

Nominal pressure drop for solenoids, sight glass, and driers are shown in Table 2.

Table 1 includes approximate equivalent lengths for copper fittings.

To ensure a solid column of liquid refrigerant to the expansion valve, the total liquid line pressure drop should never exceed 50 psi (3.4 bar). Refrigerant vapor in the liquid line will measurably reduce valve capacity and poor system performance can be expected.

To allow adequate oil return to the compressor, suction risers should be sized for a minimum of 1000 FPM (5.08 m/s) while the system is operating at minimum capacity to ensure oil return up the suction riser. Refer to Table 5 under column labeled Nominal Tons (KW) Unloaded.

Evaporator Below Condensing Unit

On a system where the evaporator is located below the condensing unit, the suction line must be sized for both pressure drop and oil return. In some cases a double suction riser must be installed to ensure reliable oil return at reduced loads. Table 3 indicates when a double suction riser should be used for listed pipe sizes to provide adequate oil return at reduced loads. The calculated information was based on maintaining a minimum of 1000 fpm (5.08 m/s) refrigerant vapor velocity.

Condenser Below Evaporator

When the condensing unit is located below the evaporator, the liquid line must be designed for both friction loss and static head loss due the vertical rise. The value of static head loss of 5 PSI/ft.(3.4 kPa/30 cm) must be added to the friction loss pressure drop in addition to all pressure drops due to driers, valves, etc.

OIL TRAPS

All horizontal suction lines should be pitched at least 1/4" per foot (2 cm/m) in the direction of the refrigerant flow to aid in the return of oil to the compressor. All suction lines with a vertical rise exceeding 3 feet (.91 meters) should have a “P” trap at the bottom and top of the riser. Suction lines with a vertical rise exceeding 25 feet (7.6 meters) should be trapped every 15 feet (4.6 meters).

REFRIGERANT CHARGE

The condensing unit is charged with a dry nitrogen holding charge. The remaining operating charge for the condensing unit, evaporator coil, and refrigerant piping must be weighed in after all refrigerant piping is installed, leak checked, and evacuated. Final adjustment of refrigerant charge should be verified by subcooling values (refer to section on Pre-Startup for checking subcooling).

REFRIGERANT PIPING REFERENCE

For more details, refer to ASHRAE Refrigeration Handbook, Chapter 2.

TABLE 1 - FITTING EQUIVALENT LENGTHS

YCUL	Short Radius Ell	Long Radius Ell
3/4" (19mm)	6.5ft. (2m)	4.5 ft.(1.4m)
7/8" (22mm)	7.8 ft. (2.4m)	5.3 ft (1.6m)
1-1/8" (29mm)	2.7ft. (.8m)	1.9 ft. (.6m)
1-3/8" (35mm)	3.2 ft. (1m)	2.2 ft. (.7m)
1-5/8" (41mm)	3.8 ft. (1.2m)	2.6 ft. (.8m)
2-1/8" (54mm)	5.2 ft. (1.6m)	3.4 ft. (1m)
2-5/8" (67mm)	6.5 ft (20m)	4.2 ft. (1.3m)

*Copper Fitting Equivalent Lengths

TABLE 2 – MISCELLANEOUS LIQUID LINE PRESSURE DROPS

Solenoid Valve	2-3 PSI (13.8 - 20.7kPa)
Filter/Drier	2-3 PSI (13.8 - 20.7kPa)
Sight Glass	0.5PSI (3.4 kPa)

TABLE 3 – REFRIGERATION PIPING CHARGES

R-410a Suct @ 36 deg Liq @ 105 deg					
SUCTION LINES					
Size	ID	Cu ft	Density Lb/Cu Ft	Oz./Ft.	Grams/30 Cm
1-3/8	1.3	0.0	2.1	0.3	8.1
1-5/8	1.5	0.0	2.1	0.4	11.5
2-1/8	2.0	0.0	2.1	0.7	20.0
2-5/8	2.5	0.0	2.1	1.1	30.9
LIQUID LINES					
3/4	0.7	0.0	60.9	2.4	66.8
7/8	0.8	0.0	60.9	3.3	92.8
1-1/8	1.0	0.0	60.9	5.6	158.3
1-3/8	1.3	0.0	60.9	8.5	241.1

Selection Data - continued

TABLE 4 – REFRIGERANT LINE CONNECTIONS

Model Number	Tons	System Number	Refrigerant Line Connection		Suction Line		Liquid Line	
			Suction	Liquid	Copper Type L inches OD	Velocity @ Nominal Capacity in FPM	Nominal Tons Unloaded	Copper Type L inches OD
0248YE	81.3	1	2.7	1.1	2-5/8	1656	13.5	1-1/8
		2	2.7	1.1	2-5/8	1656	3.5	1-1/8
0278YE	84.3	1	2.7	1.1	2-5/8	1818	14.9	1-1/8
		2	2.7	1.1	2-5/8	1572	13.2	1-1/8
0298YE	91.1	1	2.7	1.1	2-5/8	1812	14.9	1-1/8
		2	2.7	1.1	2-5/8	1896	14.9	1-1/8
0308YE	98.5	1	2.7	1.1	2-5/8	1896	14.9	1-1/8
		2	2.7	1.1	2-5/8	1896	14.9	1-1/8
0338YE	111.5	1	2.7	1.1	2-5/8	1812	14.9	1-1/8
		2	2.7	1.1	2-5/8	2598	33.6	1-1/8
0408YE	131.5	1	2.7	1.1	2-5/8	2658	32.8	1-1/8
		2	2.7	1.1	2-5/8	2658	32.8	1-1/8
0468YE	145.3	1	3.1	1.4	3-1/8	2790	31.3	1-3/8
		2	2.7	1.1	2-5/8	1926	14.9	1-1/8
0498YE	158.3	1	3.1	1.4	3-1/8	2658	30.7	1-3/8
		2	2.7	1.1	2-5/8	2556	33.1	1-1/8

Refrigerant Piping Notes

1. Based on R-410A at the nominal capacity of the unit or system, an ambient temperature of 95°F (35°C) and a suction temperature of 45°F (7.2°C).
2. Suction line sizes were calculated based on a nominal maximum pressure drop to 3 PSI/100 ft. (20.7 kPa/30.5 m). When calculating suction line pressure drop for a specific application, it should be noted that system capacity decreases as suction line pressure drop increases.
4. Nominal Tons (KW) Unloaded is based on one compressor (per system) operating at design conditions.
5. Based on minimum compressor staging for the given pipe size, a double suction riser should be used to ensure proper oil return to the compressor on all vertical suction risers. Oil returning up the riser moves up the inner surface of the pipe and depends on the mass velocity of the refrigerant vapor at the wall surface to move the oil up the vertical rise.
6. Hot gas bypass lines are typically 7/8” for lines up to 40 feet and 1-1/8” for lines over 40 feet in length (12 meters). The field connections sizes are 7/8” for the optional factory mounted hot gas bypass valve. Note: Hot gas bypass is only available for refrigerant system number 1.
7. For more information, please refer to either the Johnson Controls DX Piping Guide (Form 050.40-ES2) or the ASHRAE Refrigertion Handbook.

INTENTIONALLY LEFT BLANK

Ratings 50Hz English

MODEL: YLUA0248YE

AIR TEMPERATURE ON - CONDENSER (°F)

LCWT (°F)	75.0			80.0			85.0			90.0			95.0		
	TONS	KW	EER	TONS	KW	EER	TONS	KW	EER	TONS	KW	EER	TONS	KW	EER
35.0	65.1	47.9	14.3	63.4	50.7	13.2	61.6	53.7	12.2	59.7	57.0	11.2	57.7	60.4	10.3
37.0	67.4	48.4	14.7	65.6	51.2	13.6	63.7	54.2	12.6	61.8	57.4	11.6	59.8	60.9	10.6
39.0	69.7	48.8	15.1	67.9	51.6	14.0	66.0	54.6	12.9	64.0	57.8	11.9	61.9	61.3	10.9
41.0	72.1	49.3	15.4	70.2	52.1	14.3	68.3	55.1	13.3	66.2	58.3	12.2	64.1	61.8	11.2
43.0	74.5	49.8	15.8	72.6	52.5	14.7	70.6	55.5	13.6	68.5	58.8	12.5	66.3	62.3	11.5
45.0	77.0	50.4	16.2	75.0	53.1	15.1	72.9	56.0	13.9	70.8	59.3	12.9	68.5	62.8	11.8
47.0	79.5	50.9	16.6	77.5	53.6	15.4	75.4	56.6	14.3	73.1	59.8	13.2	70.8	63.3	12.1
49.0	82.1	51.5	16.9	80.0	54.2	15.8	77.8	57.1	14.6	75.5	60.4	13.5	73.2	63.8	12.4
51.0	84.8	52.1	17.3	82.6	54.8	16.1	80.3	57.7	15.0	78.0	60.9	13.8	75.5	64.4	12.7
53.0	87.4	52.8	17.6	85.2	55.4	16.5	82.9	58.3	15.3	80.5	61.5	14.2	78.0	65.0	13.1
55.0	90.2	53.4	18.0	87.9	56.1	16.8	85.5	59.0	15.6	83.0	62.2	14.5	80.5	65.6	13.4

MODEL: YLUA0278YE

AIR TEMPERATURE ON - CONDENSER (°F)

LCWT (°F)	75.0			80.0			85.0			90.0			95.0		
	TONS	KW	EER	TONS	KW	EER	TONS	KW	EER	TONS	KW	EER	TONS	KW	EER
35.0	68.3	54.0	13.5	66.4	57.1	12.5	64.5	60.5	11.5	62.5	64.2	10.6	60.4	68.1	9.7
37.0	70.6	54.5	13.8	68.7	57.6	12.8	66.8	61.0	11.8	64.7	64.7	10.9	62.6	68.6	10.0
39.0	73.1	55.0	14.2	71.1	58.2	13.2	69.1	61.6	12.1	67.0	65.2	11.2	64.8	69.1	10.2
41.0	75.6	55.6	14.6	73.6	58.7	13.5	71.5	62.1	12.5	69.3	65.8	11.5	67.0	69.7	10.5
43.0	78.1	56.1	14.9	76.0	59.3	13.8	73.9	62.7	12.8	71.6	66.3	11.8	69.3	70.3	10.8
45.0	80.7	56.8	15.2	78.5	59.9	14.2	76.3	63.2	13.1	74.0	66.9	12.1	71.6	70.8	11.1
47.0	83.3	57.4	15.6	81.1	60.5	14.5	78.8	63.9	13.4	76.5	67.5	12.4	74.0	71.5	11.4
49.0	86.0	58.1	15.9	83.7	61.1	14.8	81.4	64.5	13.7	79.0	68.2	12.7	76.4	72.1	11.6
51.0	88.7	58.8	16.3	86.4	61.8	15.1	84.0	65.2	14.0	81.5	68.8	12.9	78.9	72.7	11.9
53.0	91.5	59.5	16.6	89.1	62.5	15.4	86.7	65.9	14.3	84.1	69.5	13.2	81.4	73.4	12.2
55.0	94.4	60.3	16.9	91.9	63.3	15.7	89.4	66.6	14.6	86.7	70.2	13.5	84.0	74.1	12.5

MODEL: YLUA0298YE

AIR TEMPERATURE ON - CONDENSER (°F)

LCWT (°F)	75.0			80.0			85.0			90.0			95.0		
	TONS	KW	EER	TONS	KW	EER	TONS	KW	EER	TONS	KW	EER	TONS	KW	EER
35.0	74.4	60.4	13.3	72.3	63.8	12.3	70.2	67.5	11.3	68.0	71.5	10.4	65.6	75.7	9.6
37.0	77.0	61.0	13.6	74.9	64.4	12.6	72.6	68.1	11.6	70.3	72.1	10.7	68.0	76.4	9.8
39.0	79.6	61.7	14.0	77.5	65.0	13.0	75.2	68.8	11.9	72.8	72.8	11.0	70.3	77.1	10.1
41.0	82.3	62.3	14.3	80.1	65.7	13.3	77.7	69.4	12.2	75.3	73.5	11.3	72.7	77.7	10.3
43.0	85.1	63.0	14.6	82.8	66.4	13.6	80.3	70.1	12.5	77.8	74.2	11.5	75.2	78.4	10.6
45.0	87.9	63.7	15.0	85.5	67.2	13.9	83.0	70.8	12.8	80.4	74.9	11.8	77.7	79.2	10.9
47.0	90.8	64.5	15.3	88.3	67.9	14.2	85.7	71.6	13.1	83.0	75.6	12.1	80.2	79.9	11.1
49.0	93.7	65.2	15.6	91.1	68.7	14.5	88.4	72.4	13.4	85.7	76.4	12.4	82.8	80.7	11.4
51.0	96.7	66.1	15.9	94.0	69.5	14.8	91.2	73.2	13.7	88.4	77.2	12.6	85.5	81.5	11.6
53.0	99.7	66.9	16.2	96.9	70.3	15.1	94.1	74.1	14.0	91.2	78.0	12.9	88.2	82.3	11.9
55.0	102.8	67.8	16.5	99.9	71.2	15.4	97.0	74.9	14.2	94.0	78.9	13.2	90.9	83.2	12.1

 # indicates package unloaded due to high pressure conditions

? indicates no rating available at this condition

MODEL: YLUA0248YE

AIR TEMPERATURE ON - CONDENSER (°F)

LCWT (°F)	100.0			105.0			110.0			115.0		
	TONS	KW	EER	TONS	KW	EER	TONS	KW	EER	TONS	KW	EER
35.0	55.4	63.9	9.4	53.1	67.5	8.6	50.6	71.2	7.8	48.2	75.2	7.1
37.0	57.4	64.3	9.7	55.0	67.9	8.8	52.5	71.7	8.0	50.0	75.7	7.3
39.0	59.5	64.8	10.0	57.0	68.4	9.1	54.4	72.2	8.3	51.8	76.2	7.5
41.0	61.5	65.3	10.3	59.0	68.9	9.4	56.3	72.7	8.5	53.6	76.7	7.7
43.0	63.7	65.8	10.5	61.0	69.4	9.6	58.3	73.2	8.7	55.5	77.3	7.9
45.0	65.8	66.3	10.8	63.1	69.9	9.9	60.3	73.7	9.0	57.5	77.8	8.2
47.0	68.1	66.8	11.1	65.2	70.4	10.2	62.4	74.3	9.2	59.4	78.3	8.4
49.0	70.3	67.3	11.4	67.4	70.9	10.4	64.5	74.8	9.5	61.5	78.9	8.6
51.0	72.6	67.8	11.7	69.7	71.5	10.7	66.6	75.4	9.7	63.5	79.4	8.8
53.0	75.0	68.4	12.0	71.9	72.1	11.0	68.8	75.9	10.0	65.6	80.0	9.1
55.0	77.4	69.0	12.3	74.2	72.7	11.2	71.0	76.5	10.2	67.8	80.6	9.3

MODEL: YLUA0278YE

AIR TEMPERATURE ON - CONDENSER (°F)

LCWT (°F)	100.0			105.0			110.0			115.0		
	TONS	KW	EER	TONS	KW	EER	TONS	KW	EER	TONS	KW	EER
35.0	57.9	72.0	8.8	55.4	76.0	8.0	52.9	80.2	7.3	50.3	84.6	6.6
37.0	60.0	72.5	9.1	57.4	76.5	8.3	54.8	80.8	7.5	52.1	85.2	6.8
39.0	62.1	73.0	9.4	59.5	77.1	8.5	56.8	81.4	7.7	54.0	85.8	7.0
41.0	64.3	73.6	9.6	61.6	77.7	8.8	58.8	82.0	8.0	55.9	86.4	7.2
43.0	66.5	74.2	9.9	63.7	78.2	9.0	60.8	82.6	8.2	57.9	87.1	7.4
45.0	68.8	74.7	10.1	65.9	78.8	9.2	62.9	83.2	8.4	59.9	87.7	7.6
47.0	71.1	75.3	10.4	68.1	79.5	9.5	65.0	83.8	8.6	52.5	69.3	8.3
49.0	73.4	76.0	10.7	70.4	80.1	9.7	67.2	84.4	8.9	54.3	69.7	8.5
51.0	75.8	76.6	10.9	72.7	80.7	10.0	69.4	85.1	9.1	56.2	70.2	8.8
53.0	78.3	77.3	11.2	75.0	81.4	10.2	71.7	85.7	9.3	58.1	70.6	9.0
55.0	80.7	78.0	11.4	77.4	82.1	10.5	74.0	86.4	9.5	60.0	71.1	9.2

MODEL: YLUA0298YE

AIR TEMPERATURE ON - CONDENSER (°F)

LCWT (°F)	100.0			105.0			110.0			115.0		
	TONS	KW	EER	TONS	KW	EER	TONS	KW	EER	TONS	KW	EER
35.0	62.9	80.0	8.7	60.1	84.4	7.9	57.3	89.0	7.2	54.4	93.9	6.5
37.0	65.1	80.6	9.0	62.3	85.0	8.1	59.4	89.7	7.4	56.4	94.6	6.7
39.0	67.4	81.3	9.2	64.5	85.7	8.4	61.5	90.4	7.6	58.4	95.3	6.9
41.0	69.7	82.0	9.4	66.7	86.4	8.6	63.6	91.1	7.8	60.4	96.1	7.1
43.0	72.1	82.7	9.7	69.0	87.1	8.8	65.8	91.8	8.0	62.5	96.8	7.2
45.0	74.5	83.4	9.9	71.3	87.9	9.0	68.0	92.6	8.2	55.7	78.7	7.8
47.0	77.0	84.1	10.2	73.6	88.6	9.3	70.3	93.4	8.4	48.1	60.5	8.6
49.0	79.5	84.9	10.4	76.0	89.4	9.5	72.6	94.2	8.6	49.8	60.9	8.8
51.0	82.0	85.7	10.6	78.5	90.2	9.7	74.9	95.0	8.8	51.5	61.3	9.1
53.0	84.6	86.6	10.9	81.0	91.1	9.9	77.3	95.8	9.0	53.2	61.7	9.3
55.0	87.2	87.4	11.1	83.5	91.9	10.2	79.7	96.7	9.3	54.9	62.2	9.6

 # indicates package unloaded due to high pressure conditions

? indicates no rating available at this condition

Ratings 50Hz English - continued

MODEL: YLUA0308YE

AIR TEMPERATURE ON - CONDENSER (°F)

LCWT (°F)	75.0			80.0			85.0			90.0			95.0		
	TONS	KW	EER	TONS	KW	EER	TONS	KW	EER	TONS	KW	EER	TONS	KW	EER
35.0	78.6	55.4	14.4	76.5	58.5	13.4	74.4	61.7	12.4	72.1	65.3	11.5	69.8	69.1	10.6
37.0	81.4	55.9	14.8	79.3	58.9	13.8	77.1	62.2	12.8	74.8	65.7	11.8	72.4	69.6	10.9
39.0	84.4	56.4	15.2	82.1	59.4	14.2	79.9	62.7	13.2	77.5	66.2	12.2	75.0	70.0	11.2
41.0	87.4	56.9	15.6	85.1	59.9	14.6	82.7	63.2	13.5	80.2	66.7	12.5	77.7	70.6	11.6
43.0	90.4	57.5	16.1	88.1	60.5	15.0	85.6	63.8	13.9	83.1	67.3	12.9	80.5	71.1	11.9
45.0	93.6	58.1	16.5	91.1	61.1	15.4	88.6	64.3	14.3	86.0	67.8	13.2	83.2	71.6	12.2
47.0	96.8	58.7	16.9	94.3	61.6	15.8	91.6	64.9	14.7	88.9	68.4	13.6	86.1	72.2	12.6
49.0	100.1	59.3	17.3	97.5	62.3	16.2	94.7	65.5	15.0	91.9	69.0	13.9	89.0	72.8	12.9
51.0	103.5	59.9	17.7	100.7	62.9	16.6	97.9	66.1	15.4	95.0	69.7	14.3	92.0	73.5	13.2
53.0	106.9	60.6	18.2	104.0	63.6	17.0	101.1	66.8	15.8	98.1	70.3	14.6	95.0	74.1	13.5
55.0	110.4	61.3	18.6	107.5	64.3	17.3	104.4	67.5	16.2	101.3	71.0	15.0	98.1	74.8	13.9

MODEL: YLUA0338YE

AIR TEMPERATURE ON - CONDENSER (°F)

LCWT (°F)	75.0			80.0			85.0			90.0			95.0		
	TONS	KW	EER	TONS	KW	EER	TONS	KW	EER	TONS	KW	EER	TONS	KW	EER
35.0	90.0	66.5	14.1	87.6	70.1	13.1	85.1	74.1	12.1	82.5	78.4	11.2	79.8	83.0	10.3
37.0	93.3	67.1	14.5	90.8	70.7	13.5	88.2	74.7	12.5	85.5	79.0	11.5	82.7	83.6	10.6
39.0	96.6	67.7	14.9	94.0	71.4	13.8	91.3	75.4	12.8	88.5	79.7	11.8	85.6	84.3	10.9
41.0	100.0	68.4	15.3	97.3	72.0	14.2	94.5	76.0	13.2	91.6	80.3	12.2	88.6	85.0	11.2
43.0	103.4	69.1	15.7	100.6	72.7	14.6	97.8	76.7	13.5	94.8	81.0	12.5	91.7	85.7	11.5
45.0	107.0	69.8	16.1	104.1	73.5	14.9	101.1	77.5	13.9	98.0	81.8	12.8	94.9	86.4	11.8
47.0	110.6	70.5	16.5	107.6	74.2	15.3	104.5	78.2	14.2	101.3	82.5	13.1	98.1	87.1	12.1
49.0	114.3	71.3	16.8	111.2	75.0	15.7	108.0	79.0	14.5	104.7	83.3	13.5	101.3	87.9	12.4
51.0	118.0	72.1	17.2	114.8	75.8	16.0	111.5	79.8	14.9	108.1	84.1	13.8	104.7	88.8	12.7
53.0	121.9	73.0	17.6	118.6	76.7	16.4	115.2	80.6	15.2	111.6	85.0	14.1	108.0	89.6	13.0
55.0	125.8	73.8	18.0	122.4	77.5	16.8	118.8	81.5	15.6	115.2	85.8	14.4	111.5	90.5	13.3

MODEL: YLUA0408YE

AIR TEMPERATURE ON - CONDENSER (°F)

LCWT (°F)	75.0			80.0			85.0			90.0			95.0		
	TONS	KW	EER	TONS	KW	EER	TONS	KW	EER	TONS	KW	EER	TONS	KW	EER
35.0	106.6	82.9	13.8	103.6	87.3	12.8	100.5	92.1	11.8	97.3	97.3	10.9	94.0	102.9	10.0
37.0	110.4	83.8	14.1	107.3	88.2	13.1	104.1	93.1	12.1	100.8	98.2	11.2	97.4	103.8	10.3
39.0	114.2	84.7	14.5	111.0	89.2	13.4	107.7	94.0	12.4	104.3	99.2	11.5	100.8	104.8	10.5
41.0	118.2	85.7	14.8	114.9	90.1	13.8	111.4	95.0	12.7	107.9	100.2	11.7	104.2	105.8	10.8
43.0	122.2	86.7	15.2	118.8	91.1	14.1	115.2	96.0	13.0	111.5	101.2	12.0	107.7	106.8	11.1
45.0	126.3	87.7	15.5	122.7	92.1	14.4	119.0	97.0	13.3	115.2	102.3	12.3	111.3	107.9	11.3
47.0	130.5	88.7	15.9	126.7	93.3	14.7	122.9	98.1	13.6	119.0	103.4	12.6	114.9	109.0	11.6
49.0	134.8	89.8	16.2	130.9	94.4	15.0	126.9	99.2	13.9	122.8	104.5	12.9	118.7	110.1	11.8
51.0	139.1	90.9	16.5	135.1	95.5	15.3	131.0	100.4	14.2	126.7	105.7	13.1	122.4	111.3	12.1
53.0	143.5	92.1	16.9	139.3	96.7	15.7	135.1	101.6	14.5	130.7	106.9	13.4	126.3	112.6	12.4
55.0	148.0	93.3	17.2	143.7	97.9	16.0	139.3	102.8	14.8	134.8	108.2	13.7	130.2	113.8	12.6

 # indicates package unloaded due to high pressure conditions

? indicates no rating available at this condition

MODEL: YLUA0308YE

LCWT (°F)	AIR TEMPERATURE ON - CONDENSER (°F)											
	100.0			105.0			110.0			115.0		
	TONS	KW	EER	TONS	KW	EER	TONS	KW	EER	TONS	KW	EER
35.0	67.1	72.9	9.7	64.3	77.0	8.9	61.5	81.3	8.1	58.6	85.9	7.3
37.0	69.6	73.4	10.0	66.7	77.5	9.1	63.8	81.8	8.3	60.7	86.4	7.6
39.0	72.1	73.9	10.3	69.1	78.0	9.4	66.1	82.3	8.6	63.0	86.9	7.8
41.0	74.7	74.4	10.6	71.6	78.5	9.7	68.5	82.8	8.8	65.2	87.5	8.0
43.0	77.3	74.9	10.9	74.1	79.0	10.0	70.9	83.4	9.1	67.6	88.0	8.3
45.0	80.0	75.5	11.2	76.7	79.6	10.3	73.4	83.9	9.4	69.9	88.6	8.5
47.0	82.8	76.1	11.5	79.3	80.2	10.5	75.9	84.5	9.6	72.3	89.2	8.7
49.0	85.6	76.7	11.8	82.0	80.8	10.8	78.5	85.1	9.9	74.8	89.8	9.0
51.0	88.4	77.3	12.1	84.8	81.4	11.1	81.1	85.8	10.2	77.3	90.4	9.2
53.0	91.3	78.0	12.4	87.6	82.1	11.4	83.8	86.4	10.4	79.9	91.1	9.5
55.0	94.3	78.7	12.7	90.4	82.8	11.7	86.5	87.1	10.7	82.5	91.7	9.7

MODEL: YLUA0338YE

LCWT (°F)	AIR TEMPERATURE ON - CONDENSER (°F)											
	100.0			105.0			110.0			115.0		
	TONS	KW	EER	TONS	KW	EER	TONS	KW	EER	TONS	KW	EER
35.0	76.6	87.6	9.4	73.3	92.4	8.6	70.0	97.5	7.8	66.6	103.0	7.1
37.0	79.4	88.2	9.7	76.0	93.1	8.8	72.6	98.2	8.0	69.1	103.6	7.3
39.0	82.2	88.9	10.0	78.7	93.7	9.1	75.2	98.9	8.3	71.6	104.3	7.5
41.0	85.1	89.6	10.3	81.5	94.4	9.4	77.9	99.6	8.5	74.1	105.1	7.7
43.0	88.1	90.3	10.5	84.4	95.2	9.6	80.6	100.3	8.8	76.7	105.8	7.9
45.0	91.1	91.0	10.8	87.2	95.9	9.9	83.3	101.1	9.0	79.4	106.6	8.2
47.0	94.2	91.8	11.1	90.2	96.7	10.1	86.2	101.8	9.2	82.1	107.3	8.4
49.0	97.3	92.6	11.4	93.2	97.5	10.4	89.1	102.6	9.5	75.1	89.7	9.0
51.0	100.5	93.4	11.7	96.3	98.3	10.7	92.0	103.5	9.7	77.6	90.4	9.3
53.0	103.8	94.2	11.9	99.4	99.1	10.9	95.0	104.3	10.0	80.2	91.0	9.5
55.0	107.1	95.1	12.2	102.6	100.0	11.2	98.1	105.2	10.2	82.8	91.7	9.8

MODEL:YLUA0408YE

LCWT (°F)	AIR TEMPERATURE ON - CONDENSER (°F)											
	100.0			105.0			110.0			115.0		
	TONS	KW	EER	TONS	KW	EER	TONS	KW	EER	TONS	KW	EER
35.0	90.1	108.5	9.1	86.2	114.4	8.3	82.1	120.7	7.5	78.0	127.4	6.8
37.0	93.3	109.4	9.4	89.2	115.3	8.5	85.1	121.6	7.7	80.8	128.3	7.0
39.0	96.6	110.4	9.6	92.4	116.3	8.8	88.0	122.6	8.0	83.6	129.3	7.2
41.0	99.9	111.3	9.9	95.5	117.2	9.0	91.1	123.6	8.2	86.5	130.2	7.4
43.0	103.3	112.4	10.1	98.8	118.3	9.2	94.2	124.6	8.4	89.5	131.3	7.6
45.0	106.7	113.4	10.4	102.0	119.4	9.5	97.3	125.6	8.6	92.4	132.3	7.8
47.0	110.2	114.6	10.6	105.4	120.5	9.7	100.5	126.8	8.8	95.5	133.4	8.0
49.0	113.8	115.7	10.9	108.8	121.6	9.9	103.7	127.9	9.0	98.6	134.6	8.2
51.0	117.4	116.9	11.1	112.2	122.8	10.1	107.0	129.1	9.2	56.5	59.5	9.8
53.0	121.1	118.1	11.3	115.7	124.1	10.4	110.4	130.4	9.4	58.4	59.9	10.0
55.0	124.8	119.4	11.6	119.3	125.4	10.6	113.8	131.7	9.6	60.4	60.3	10.3

 # indicates package unloaded due to high pressure conditions

? indicates no rating available at this condition

Ratings 50Hz English - continued

MODEL: YLUA0468YE

AIR TEMPERATURE ON - CONDENSER (°F)

LCWT (°F)	75.0			80.0			85.0			90.0			95.0		
	TONS	KW	EER	TONS	KW	EER	TONS	KW	EER	TONS	KW	EER	TONS	KW	EER
35.0	117.7	88.7	13.8	114.5	93.4	12.9	111.2	98.5	11.9	107.5	104.4	10.9	103.9	110.5	10.1
37.0	121.8	89.7	14.2	118.5	94.5	13.2	115.0	99.7	12.2	111.4	105.3	11.3	107.7	111.3	10.4
39.0	126.2	90.6	14.5	122.7	95.4	13.5	119.1	100.6	12.5	115.3	106.2	11.6	111.5	112.2	10.7
41.0	130.6	91.6	14.9	126.9	96.4	13.9	123.2	101.6	12.9	119.4	107.2	11.9	115.4	113.2	10.9
43.0	135.1	92.6	15.3	131.3	97.4	14.2	127.5	102.5	13.2	123.5	108.2	12.2	119.4	114.2	11.2
45.0	139.7	93.6	15.7	135.8	98.4	14.6	131.8	103.6	13.5	127.7	109.2	12.5	123.4	115.2	11.5
47.0	144.4	94.7	16.0	140.3	99.5	14.9	136.2	104.7	13.8	131.9	110.3	12.8	127.6	116.3	11.8
49.0	149.1	95.8	16.4	144.9	100.7	15.2	140.7	105.8	14.2	136.3	111.5	13.1	131.8	117.5	12.1
51.0	154.0	97.0	16.7	149.7	101.8	15.6	145.2	107.0	14.5	140.7	112.6	13.4	136.0	118.6	12.4
53.0	159.0	98.2	17.1	154.5	103.1	15.9	149.9	108.3	14.8	145.2	113.9	13.7	140.4	119.9	12.6
55.0	164.1	99.4	17.4	159.4	104.3	16.2	154.6	109.6	15.1	149.8	115.2	14.0	144.8	121.2	12.9

MODEL: YLUA0498YE

AIR TEMPERATURE ON - CONDENSER (°F)

LCWT (°F)	75.0			80.0			85.0			90.0			95.0		
	TONS	KW	EER	TONS	KW	EER	TONS	KW	EER	TONS	KW	EER	TONS	KW	EER
35.0	128.5	100.7	13.5	124.9	106.0	12.5	121.2	111.9	11.6	117.4	118.2	10.7	113.5	124.9	9.8
37.0	133.1	101.7	13.9	129.4	107.1	12.9	125.6	112.9	11.9	121.6	119.2	11.0	117.5	126.0	10.1
39.0	137.8	102.8	14.2	134.0	108.2	13.2	130.0	114.0	12.2	125.9	120.3	11.3	121.7	127.1	10.4
41.0	142.6	103.9	14.6	138.6	109.3	13.6	134.5	115.2	12.6	130.2	121.5	11.6	125.9	128.3	10.7
43.0	147.5	105.0	14.9	143.3	110.5	13.9	139.1	116.3	12.9	134.7	122.7	11.9	130.2	129.5	10.9
45.0	152.5	106.2	15.3	148.2	111.7	14.2	143.8	117.6	13.2	139.2	123.9	12.2	134.6	130.7	11.2
47.0	157.6	107.4	15.6	153.1	113.0	14.5	148.6	118.8	13.5	143.8	125.2	12.5	139.0	132.0	11.5
49.0	162.9	108.7	16.0	158.2	114.2	14.9	153.5	120.1	13.8	148.6	126.5	12.7	143.6	133.3	11.7
51.0	168.2	110.0	16.3	163.3	115.6	15.2	158.4	121.5	14.1	153.4	127.9	13.0	148.2	134.7	12.0
53.0	173.6	111.4	16.7	168.6	117.0	15.5	163.4	123.0	14.4	158.2	129.3	13.3	152.9	136.2	12.3
55.0	179.1	112.8	17.0	173.9	118.4	15.8	168.6	124.4	14.7	163.2	130.8	13.6	157.7	137.7	12.5

 # indicates package unloaded due to high pressure conditions

? indicates no rating available at this condition

MODEL: YLUA0468YE

LCWT (°F)	AIR TEMPERATURE ON - CONDENSER (°F)											
	100.0			105.0			110.0			115.0		
	TONS	KW	EER	TONS	KW	EER	TONS	KW	EER	TONS	KW	EER
35.0	99.8	116.3	9.2	95.6	122.6	8.4	91.1	129.4	7.7	86.6	136.6	6.9
37.0	103.4	117.1	9.5	99.0	123.5	8.7	94.4	130.3	7.9	89.8	137.5	7.1
39.0	107.1	118.1	9.8	102.5	124.4	8.9	97.8	131.2	8.1	93.0	138.4	7.3
41.0	110.8	119.1	10.0	106.1	125.4	9.2	101.2	132.2	8.3	96.3	139.4	7.6
43.0	114.6	120.1	10.3	109.7	126.4	9.4	104.7	133.2	8.6	99.6	140.4	7.8
45.0	118.5	121.1	10.6	113.4	127.5	9.7	108.2	134.3	8.8	84.2	102.8	8.7
47.0	122.5	122.3	10.8	117.2	128.6	9.9	111.9	135.4	9.0	87.1	103.4	8.9
49.0	126.5	123.4	11.1	121.0	129.8	10.1	115.5	136.6	9.2	90.1	104.2	9.2
51.0	130.6	124.6	11.3	125.0	131.0	10.4	119.3	137.8	9.5	93.1	104.9	9.4
53.0	134.7	125.9	11.6	128.9	132.3	10.6	123.1	139.0	9.7	96.2	105.7	9.7
55.0	139.0	127.2	11.9	133.0	133.6	10.9	126.9	140.3	9.9	99.4	106.5	9.9

MODEL: YLUA0498YE

LCWT (°F)	AIR TEMPERATURE ON - CONDENSER (°F)											
	100.0			105.0			110.0			115.0		
	TONS	KW	EER	TONS	KW	EER	TONS	KW	EER	TONS	KW	EER
35.0	108.8	131.7	9.0	104.1	138.9	8.2	99.3	146.6	7.4	94.3	154.8	6.7
37.0	112.7	132.8	9.3	107.8	140.0	8.4	102.8	147.6	7.7	97.7	155.8	6.9
39.0	116.7	133.9	9.5	111.6	141.1	8.7	106.5	148.7	7.9	101.2	156.9	7.1
41.0	120.8	135.0	9.8	115.5	142.2	8.9	110.2	149.9	8.1	104.7	158.1	7.3
43.0	124.9	136.2	10.0	119.5	143.4	9.1	113.9	151.1	8.3	108.3	159.3	7.5
45.0	129.1	137.5	10.3	123.5	144.7	9.4	117.8	152.4	8.5	93.5	121.6	8.3
47.0	133.3	138.8	10.5	127.6	146.0	9.6	121.7	153.7	8.7	96.7	122.5	8.5
49.0	137.7	140.1	10.8	131.7	147.4	9.8	125.6	155.0	9.0	100.0	123.4	8.8
51.0	142.1	141.6	11.0	135.9	148.8	10.1	129.7	156.4	9.2	103.3	124.3	9.0
53.0	146.6	143.0	11.2	140.3	150.2	10.3	133.8	157.9	9.4	106.7	125.3	9.2
55.0	151.2	144.5	11.5	144.6	151.8	10.5	138.0	159.4	9.6	110.1	126.4	9.5

 # indicates package unloaded due to high pressure conditions

? indicates no rating available at this condition

Ratings 50Hz SI

MODEL: YLUA0248YE

AIR TEMPERATURE ON - CONDENSER (°C)

LCWT (°C)	25.0			30.0			35.0			40.0			45.0		
	KW	KW	COP	KW	KW	COP	KW	KW	COP	KW	KW	COP	KW	KW	COP
2.0	228.9	49.2	4.1	217.5	54.5	3.6	205.3	60.6	3.1	190.3	66.9	2.6	174.8	73.7	2.2
3.0	236.1	49.5	4.2	224.4	54.9	3.6	211.8	61.0	3.1	196.5	67.3	2.7	180.6	74.2	2.2
4.0	243.5	50.0	4.3	231.4	55.3	3.7	218.5	61.4	3.2	202.8	67.7	2.7	186.4	74.7	2.3
5.0	251.0	50.4	4.4	238.6	55.7	3.8	225.4	61.8	3.3	209.2	68.2	2.8	192.4	75.1	2.4
6.0	258.6	50.8	4.5	245.9	56.1	3.9	232.3	62.2	3.4	215.7	68.6	2.9	198.5	75.6	2.4
7.0	266.4	51.3	4.6	253.4	56.6	4.0	239.4	62.7	3.5	222.4	69.0	2.9	204.7	76.0	2.5
8.0	274.3	51.8	4.7	260.9	57.0	4.1	246.6	63.1	3.5	229.2	69.5	3.0	211.0	76.5	2.5
9.0	282.3	52.3	4.8	268.6	57.5	4.2	254.0	63.6	3.6	236.1	70.0	3.1	217.5	77.0	2.6
10.0	290.5	52.8	4.9	276.5	58.0	4.3	261.5	64.1	3.7	243.1	70.5	3.2	224.1	77.5	2.7
11.0	298.8	53.4	5.0	284.5	58.6	4.4	269.1	64.6	3.8	250.3	71.0	3.2	230.7	78.0	2.7
12.0	307.3	54.0	5.1	292.6	59.1	4.4	276.8	65.2	3.9	257.6	71.5	3.3	237.5	78.5	2.8

MODEL: YLUA0278YE

AIR TEMPERATURE ON - CONDENSER (°C)

LCWT (°C)	25.0			30.0			35.0			40.0			45.0		
	KW	KW	COP	KW	KW	COP	KW	KW	COP	KW	KW	COP	KW	KW	COP
2.0	240.0	55.4	3.9	227.8	61.4	3.3	214.7	68.2	2.9	198.9	75.3	2.4	182.5	83.0	2.0
3.0	247.5	55.8	4.0	235.0	61.9	3.4	221.6	68.7	2.9	205.3	75.8	2.5	188.4	83.5	2.1
4.0	255.1	56.3	4.1	242.3	62.3	3.5	228.5	69.2	3.0	211.8	76.3	2.6	194.5	84.1	2.1
5.0	262.9	56.8	4.1	249.8	62.8	3.6	235.7	69.7	3.1	218.5	76.8	2.6	200.7	84.6	2.2
6.0	270.9	57.3	4.2	257.4	63.3	3.7	242.9	70.2	3.2	225.3	77.4	2.7	207.0	85.2	2.3
7.0	279.0	57.8	4.3	265.1	63.8	3.8	250.3	70.7	3.2	232.2	77.9	2.7	213.5	85.7	2.3
8.0	287.2	58.4	4.4	273.0	64.4	3.8	257.8	71.3	3.3	239.2	78.4	2.8	220.0	86.3	2.4
9.0	295.6	59.0	4.5	281.0	64.9	3.9	265.4	71.8	3.4	246.4	79.0	2.9	226.7	86.9	2.4
10.0	304.0	59.6	4.6	289.1	65.5	4.0	273.2	72.4	3.5	253.7	79.6	2.9	233.5	87.5	2.5
11.0	312.7	60.3	4.7	297.4	66.2	4.1	281.1	73.0	3.5	261.1	80.2	3.0	204.1	68.9	2.7
12.0	321.5	60.9	4.8	305.8	66.8	4.2	289.1	73.6	3.6	268.6	80.8	3.1	210.2	69.3	2.8

MODEL: YLUA0298YE

AIR TEMPERATURE ON - CONDENSER (°C)

LCWT (°C)	25.0			30.0			35.0			40.0			45.0		
	KW	KW	COP	KW	KW	COP	KW	KW	COP	KW	KW	COP	KW	KW	COP
2.0	261.5	61.9	3.8	247.9	68.5	3.3	233.3	75.9	2.8	215.8	83.7	2.4	197.6	92.1	2.0
3.0	269.7	62.5	3.9	255.6	69.0	3.4	240.6	76.5	2.9	222.6	84.3	2.5	203.9	92.8	2.1
4.0	278.0	63.0	4.0	263.5	69.6	3.5	248.1	77.1	3.0	229.6	84.9	2.5	210.4	93.4	2.1
5.0	286.4	63.7	4.1	271.6	70.2	3.5	255.8	77.7	3.0	236.7	85.5	2.6	217.0	94.1	2.2
6.0	295.0	64.3	4.2	279.8	70.8	3.6	263.6	78.4	3.1	244.0	86.1	2.6	223.7	94.7	2.2
7.0	303.8	64.9	4.2	288.1	71.5	3.7	271.4	79.0	3.2	251.3	86.8	2.7	230.5	95.4	2.3
8.0	312.7	65.6	4.3	296.6	72.2	3.8	279.5	79.7	3.2	258.8	87.5	2.8	237.5	96.1	2.3
9.0	321.8	66.3	4.4	305.2	72.8	3.8	287.6	80.4	3.3	266.4	88.2	2.8	244.5	96.8	2.4
10.0	331.0	67.0	4.5	314.0	73.6	3.9	295.9	81.1	3.4	274.2	88.9	2.9	217.1	78.6	2.6
11.0	340.4	67.7	4.6	322.8	74.3	4.0	304.4	81.8	3.4	282.0	89.6	2.9	223.5	79.1	2.6
12.0	349.9	68.5	4.7	331.9	75.1	4.1	313.0	82.6	3.5	290.0	90.4	3.0	192.5	60.6	2.9

MODEL: YLUA0308YE

AIR TEMPERATURE ON - CONDENSER (°C)

LCWT (°C)	25.0			30.0			35.0			40.0			45.0		
	KW	KW	COP	KW	KW	COP	KW	KW	COP	KW	KW	COP	KW	KW	COP
2.0	276.4	56.8	4.1	262.8	62.6	3.6	248.3	69.2	3.1	230.7	76.3	2.7	212.4	84.2	2.3
3.0	285.4	57.2	4.2	271.4	63.0	3.7	256.5	69.7	3.2	238.3	76.7	2.8	219.5	84.6	2.3
4.0	294.6	57.6	4.4	280.2	63.4	3.8	264.8	70.1	3.3	246.1	77.2	2.8	226.7	85.1	2.4
5.0	304.1	58.1	4.5	289.1	63.9	3.9	273.3	70.6	3.4	254.0	77.7	2.9	234.0	85.6	2.5
6.0	313.7	58.6	4.6	298.2	64.4	4.0	282.0	71.0	3.5	262.1	78.1	3.0	241.5	86.1	2.5
7.0	323.5	59.1	4.7	307.6	64.9	4.1	290.8	71.5	3.6	270.3	78.6	3.1	249.1	86.6	2.6
8.0	333.5	59.6	4.8	317.1	65.4	4.2	299.8	72.1	3.7	278.6	79.2	3.1	256.8	87.1	2.6
9.0	343.7	60.2	4.9	326.8	65.9	4.3	308.9	72.6	3.7	287.2	79.7	3.2	264.7	87.6	2.7
10.0	354.2	60.8	5.0	336.7	66.5	4.4	318.3	73.2	3.8	295.8	80.3	3.3	272.7	88.2	2.8
11.0	364.8	61.3	5.1	346.8	67.1	4.5	327.8	73.7	3.9	304.7	80.9	3.4	280.9	88.8	2.8
12.0	375.6	62.0	5.2	357.0	67.7	4.6	337.5	74.3	4.0	313.7	81.5	3.4	289.2	89.4	2.9

MODEL: YLUA0338YE

AIR TEMPERATURE ON - CONDENSER (°C)

LCWT (°C)	25.0			30.0			35.0			40.0			45.0		
	KW	KW	COP	KW	KW	COP	KW	KW	COP	KW	KW	COP	KW	KW	COP
2.0	316.6	68.1	4.1	300.6	75.1	3.5	283.6	83.2	3.0	263.1	91.6	2.6	241.7	101.0	2.2
3.0	326.9	68.6	4.2	310.3	75.7	3.6	292.8	83.7	3.1	271.6	92.2	2.7	249.6	101.6	2.2
4.0	337.3	69.2	4.3	320.2	76.3	3.7	302.2	84.3	3.2	280.3	92.8	2.7	257.7	102.2	2.3
5.0	347.8	69.8	4.4	330.3	76.9	3.8	311.7	85.0	3.3	289.2	93.4	2.8	265.9	102.8	2.4
6.0	358.6	70.4	4.5	340.5	77.5	3.9	321.5	85.6	3.4	298.3	94.1	2.9	274.3	103.5	2.4
7.0	369.7	71.1	4.6	351.1	78.1	4.0	331.4	86.2	3.4	307.5	94.8	2.9	282.8	104.2	2.5
8.0	380.9	71.8	4.7	361.7	78.8	4.1	341.4	86.9	3.5	316.9	95.4	3.0	291.5	104.9	2.5
9.0	392.4	72.4	4.8	372.6	79.5	4.2	351.7	87.6	3.6	326.4	96.1	3.1	300.3	105.6	2.6
10.0	404.1	73.2	4.9	383.7	80.2	4.3	362.2	88.3	3.7	336.1	96.9	3.1	309.3	106.3	2.7
11.0	416.0	73.9	5.0	394.9	81.0	4.3	372.8	89.1	3.8	346.0	97.6	3.2	318.5	107.1	2.7
12.0	428.1	74.7	5.1	406.4	81.7	4.4	383.6	89.9	3.8	356.1	98.4	3.3	290.3	89.3	2.9

MODEL: YLUA0408YE

AIR TEMPERATURE ON - CONDENSER (°C)

LCWT (°C)	25.0			30.0			35.0			40.0			45.0		
	KW	KW	COP	KW	KW	COP	KW	KW	COP	KW	KW	COP	KW	KW	COP
2.0	374.6	84.9	3.9	355.0	93.4	3.4	334.2	103.2	3.0	309.1	113.5	2.5	283.1	125.0	2.1
3.0	386.5	85.7	4.0	366.2	94.2	3.5	344.8	104.0	3.0	319.0	114.3	2.6	292.2	125.8	2.2
4.0	398.7	86.5	4.1	377.7	95.1	3.6	355.5	104.9	3.1	329.0	115.1	2.6	301.4	126.6	2.2
5.0	411.1	87.4	4.2	389.3	96.0	3.7	366.5	105.8	3.2	339.1	116.0	2.7	310.7	127.5	2.3
6.0	423.5	88.3	4.3	401.2	96.9	3.8	377.6	106.7	3.2	349.4	117.0	2.8	320.2	128.4	2.3
7.0	436.3	89.2	4.4	413.2	97.8	3.8	388.9	107.7	3.3	359.9	117.9	2.8	329.8	129.4	2.4
8.0	449.3	90.2	4.5	425.5	98.8	3.9	400.4	108.6	3.4	370.5	118.9	2.9	339.6	130.4	2.4
9.0	462.6	91.2	4.6	437.9	99.8	4.0	412.1	109.7	3.4	381.3	120.0	2.9	349.5	131.4	2.5
10.0	476.0	92.1	4.7	450.6	100.8	4.1	423.9	110.7	3.5	392.2	121.0	3.0	359.5	132.5	2.5
11.0	489.7	93.2	4.7	463.4	101.9	4.1	436.0	111.8	3.6	403.3	122.1	3.1	369.7	133.6	2.6
12.0	503.6	94.2	4.8	476.5	103.0	4.2	448.2	112.9	3.6	414.6	123.3	3.1	380.0	134.7	2.6

Ratings 50Hz SI - continued

MODEL: YLUA0468YE

AIR TEMPERATURE ON - CONDENSER (°C)

LCWT (°C)	25.0			30.0			35.0			40.0			45.0		
	KW	KW	COP	KW	KW	COP	KW	KW	COP	KW	KW	COP	KW	KW	COP
2.0	413.5	91.0	4.0	392.7	99.9	3.5	369.4	110.7	3.0	342.8	121.5	2.5	314.4	133.9	2.1
3.0	426.7	91.8	4.1	404.8	100.9	3.5	381.4	111.5	3.1	353.8	122.3	2.6	324.7	134.7	2.2
4.0	440.3	92.6	4.2	417.6	101.8	3.6	393.6	112.3	3.1	365.1	123.2	2.7	335.1	135.6	2.3
5.0	454.1	93.5	4.3	430.7	102.6	3.7	406.0	113.2	3.2	376.5	124.1	2.7	345.6	136.5	2.3
6.0	468.2	94.4	4.3	444.0	103.5	3.8	418.5	114.1	3.3	388.1	125.0	2.8	356.3	137.4	2.4
7.0	482.6	95.3	4.4	457.6	104.5	3.9	431.3	115.0	3.4	399.9	126.0	2.9	367.2	138.3	2.4
8.0	497.1	96.3	4.5	471.4	105.5	4.0	444.3	116.0	3.4	411.9	127.0	2.9	378.2	139.3	2.5
9.0	512.0	97.3	4.6	485.4	106.5	4.1	457.5	117.0	3.5	424.1	128.0	3.0	389.5	140.3	2.5
10.0	527.1	98.3	4.7	499.6	107.5	4.1	470.9	118.0	3.6	436.4	129.1	3.1	328.4	102.3	2.8
11.0	542.5	99.4	4.8	514.1	108.6	4.2	484.5	119.1	3.7	449.0	130.2	3.1	338.3	103.0	2.9
12.0	558.1	100.5	4.9	528.8	109.7	4.3	498.3	120.3	3.7	461.8	131.3	3.2	348.4	103.7	3.0

MODEL: YLUA0498YE

AIR TEMPERATURE ON - CONDENSER (°C)

LCWT (°C)	25.0			30.0			35.0			40.0			45.0		
	KW	KW	COP	KW	KW	COP	KW	KW	COP	KW	KW	COP	KW	KW	COP
2.0	451.7	103.0	3.9	428.2	113.4	3.4	403.3	125.2	2.9	373.4	137.7	2.5	342.3	151.8	2.1
3.0	466.1	104.0	4.0	441.9	114.4	3.5	416.2	126.2	3.0	385.4	138.7	2.5	353.4	152.7	2.1
4.0	480.9	105.0	4.1	455.8	115.4	3.5	429.4	127.2	3.1	397.6	139.7	2.6	364.6	153.7	2.2
5.0	495.9	106.0	4.2	470.0	116.4	3.6	442.8	128.3	3.1	409.9	140.8	2.7	376.0	154.7	2.2
6.0	511.2	107.1	4.2	484.5	117.5	3.7	456.4	129.3	3.2	422.5	141.8	2.7	387.6	155.8	2.3
7.0	526.9	108.1	4.3	499.2	118.5	3.8	470.2	130.4	3.3	435.3	143.0	2.8	399.3	156.9	2.3
8.0	542.8	109.2	4.4	514.2	119.7	3.9	484.2	131.6	3.3	448.3	144.1	2.9	411.3	158.1	2.4
9.0	559.0	110.4	4.5	529.4	120.9	3.9	498.5	132.8	3.4	461.5	145.3	2.9	423.4	159.3	2.5
10.0	575.4	111.5	4.6	544.9	122.1	4.0	513.0	134.0	3.5	474.9	146.6	3.0	364.5	121.3	2.7
11.0	592.2	112.7	4.7	560.6	123.3	4.1	527.8	135.3	3.6	488.5	147.9	3.0	375.3	122.2	2.8
12.0	609.2	114.0	4.8	576.6	124.6	4.2	542.8	136.6	3.6	502.4	149.2	3.1	386.3	123.1	2.8

Part Load Ratings

YLUA0248YE				
% FULL LOAD DISPL.	TONS	COMPR KW	AMBIENT °F	UNIT EER
100.0	81.3	54.5	80.0	16.0
83.3	68.6	44.9	80.0	15.9
66.7	55.8	34.0	80.0	16.5
50.0	41.7	25.2	80.0	16.5
33.3	27.6	16.4	80.0	16.7
16.7	13.8	8.2	80.0	16.7
IPLV = 16.6 EER				

YLUA0278YE				
% FULL LOAD DISPL.	TONS	COMPR KW	AMBIENT °F	UNIT EER
100.0	85.1	61.5	80.0	15.0
83.6	72.6	52.0	80.0	14.8
66.7	58.6	38.1	80.0	15.7
50.3	44.9	29.2	80.0	15.7
33.3	29.0	18.4	80.0	16.0
16.9	15.6	10.1	80.0	15.9
IPLV = 15.8 EER				

YLUA0298YE				
% FULL LOAD DISPL.	TONS	COMPR KW	AMBIENT °F	UNIT EER
100.0	92.5	69.1	80.0	14.6
83.6	78.5	57.0	80.0	14.8
49.3	47.0	30.5	80.0	15.8
32.8	31.1	19.9	80.0	16.0
16.4	15.6	9.9	80.0	16.1
IPLV = 15.7 EER				

YLUA0308YE				
% FULL LOAD DISPL.	TONS	COMPR KW	AMBIENT °F	UNIT EER
100.0	99.1	62.6	80.0	16.4
83.8	84.1	51.4	80.0	16.4
50.0	50.8	28.7	80.0	15.7
16.2	15.6	9.4	80.0	16.9
IPLV = 16.3 EER				

YLUA0338YE				
% FULL LOAD DISPL.	TONS	COMPR KW	AMBIENT °F	UNIT EER
100.0	113.0	75.4	80.0	15.9
86.1	99.0	63.5	80.0	16.1
57.0	66.4	39.4	80.0	16.1
43.0	49.1	30.6	80.0	16.6
13.9	15.5	9.6	80.0	16.5
IPLV = 16.4 EER				

YLUA0408YE				
% FULL LOAD DISPL.	TONS	COMPR KW	AMBIENT °F	UNIT EER
100.0	133.0	94.9	80.0	15.2
75.0	101.7	68.0	80.0	15.6
50.0	70.4	41.0	80.0	16.5
25.0	31.4	24.7	80.0	14.3
IPLV = 15.7 EER				

YLUA0468YE				
% FULL LOAD DISPL.	TONS	COMPR KW	AMBIENT °F	UNIT EER
100.0	113.0	75.4	80.0	15.9
77.7	99.0	63.5	80.0	16.1
67.0	66.4	39.4	80.0	16.1
44.7	49.1	30.6	80.0	16.6
13.9	15.5	9.6	80.0	16.5
IPLV = 16.4 EER				

YLUA0498YE				
% FULL LOAD DISPL.	TONS	COMPR KW	AMBIENT °F	UNIT EER
100.0	160.7	114.9	80.0	15.0
80.0	132.2	86.3	80.0	15.9
60.0	100.1	62.4	80.0	15.9
40.0	65.7	41.5	80.0	16.3
20.0	32.6	20.7	80.0	16.2
IPLV = 16.1 EER				

Physical Data

Refrigerant R-410A	Model Number YLUA							
	HIGH EFFICIENCY UNITS							
	0248YE	0278YE	0298YE	0308YE	0338YE	0408YE	0468YE	0498YE
General Unit Data								
Length (mm)	2948.9	2948.9	2948.9	3624.6	3624.6	3624.6	4767.6	4767.6
Width (mm)	2235.2	2235.2	2235.2	2235.2	2235.2	2235.2	2235.2	2235.2
Height (mm)	2392.7	2392.7	2392.7	2392.7	2392.7	2392.7	2392.7	2392.7
Refrigerant								
Number of Refrigerant Circuits	2	2	2	2	2	2	2	2
Refrigerant Charge Circuit 1 (kg.)	24.5	25.4	25.4	35.4	25.4	36.7	36.7	49
Refrigerant Charge Circuit 2 (kg.)	22.2	22.2	23.1	33.1	44.5	34.5	34.5	43.5
Oil Charge, ckt1, (l.)	9.8	12.4	12.4	10.4	12.4	12.6	18.9	18.9
Oil Charge, ckt2, (l.)	9.8	9.8	10.4	10.4	12.6	12.6	10.4	12.6
Shipping Weight (kg.)	1684.2	1809.4	1898.3	2227.6	2334.2	2368.2	2936.1	3006.4
Compressors, scroll type								
Compressors per circuit	3/3	3/3	3/2	2/2	3/2	2/2	3/2	3/2
Compressors per unit	6	6	5	4	5	4	5	5
Nominal Tons per compressor								
Circuit 1	45.7	52.7	52.7	52.7/112.5	52.7	112.5	112.5	112.5
Circuit 2	45.7	45.7	52.7/112.5	52.7/112.5	112.5	112.5	52.7/112.5	112.5
Condenser								
Total Face Area m2	9.9	9.9	9.9	14.9	14.9	14.9	19.9	19.9
Number of Rows	3	3	3	3	3	3	3	3
Fins per mm	1	1	1	1	1	1	1	1
Condenser Fans, Low Sound								
Number of Fans, ckt1./ckt2.	2/2	2/2	2/2	3/3	2/4	3/3	4/4	4/4
Fan hp	1.5	1.5	1.5	1.5	1.5	1.5	1.5	1.5
Total Chiller CFM	24541.3	24541.3	24541.3	36811.9	36811.9	36811.9	49082.5	49082.5

Dimension Drawings

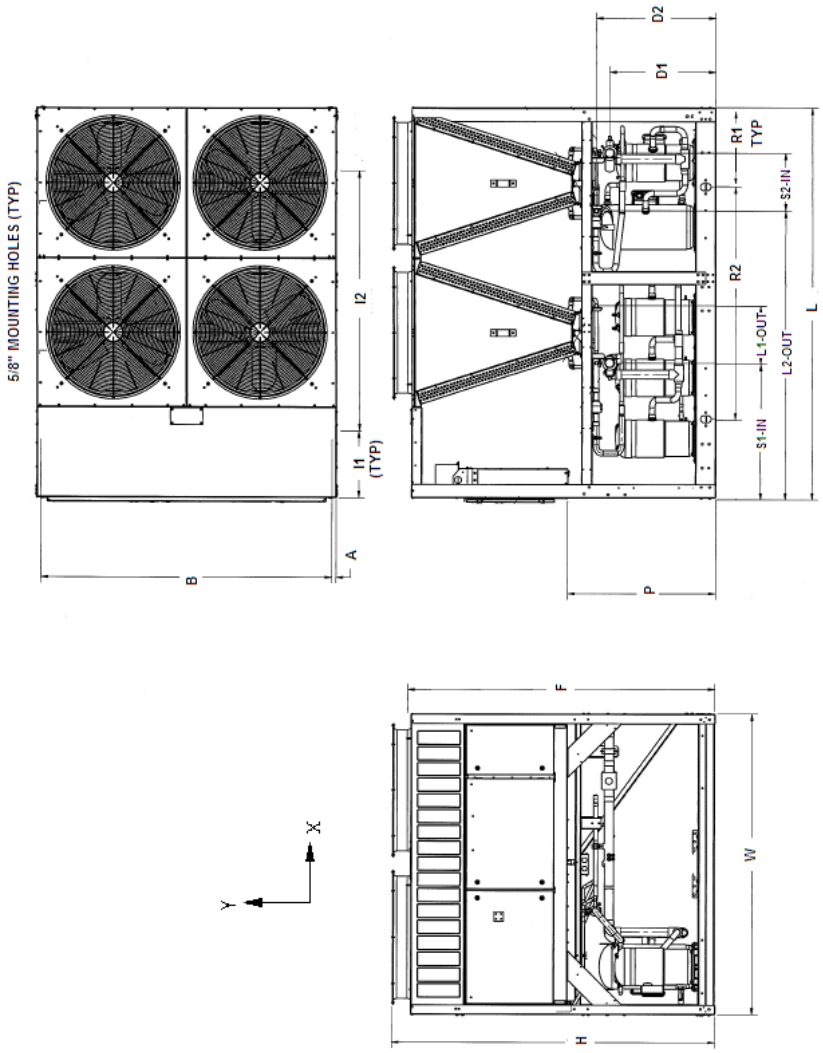

New Model	Length	Width	Height			Connection Sizes		System 1 Dimensions		System 2 Dimensions	
	L	W	H	F	P	Suction In 1 / 2	Liquid Out 1 / 2	Suction In	Liquid Out	Suction In	Liquid Out
YLAA0248YE	116.1	88.3	95.3	89.7	43.9	2.7	1.1	39.6	17	17	84.3
YLAA0278YE	116.1	88.3	95.3	89.7	43.9	2.7	1.1	39.6	17	17	84.3
YLAA0298YE	116.1	88.3	95.3	89.7	43.9	2.7	1.1	39.6	17	17	84.3

New Model		Isolator Location Dimensions										Rigging Hole Locations			
	D2	I1	I2	I3	I4	I5	I6	I7	I8	A	B	R1	R2	R3	R4
YLAA0248YE	35.5	19.5	76.6							1.3	85.5	23.2	68.3		
YLAA0278YE	35.5	19.5	76.6							1.3	85.5	23.2	68.3		
YLAA0298YE	35.5	18.5	76.6							1.3	85.5	23.2	68.3		

Dimension Drawings - continued

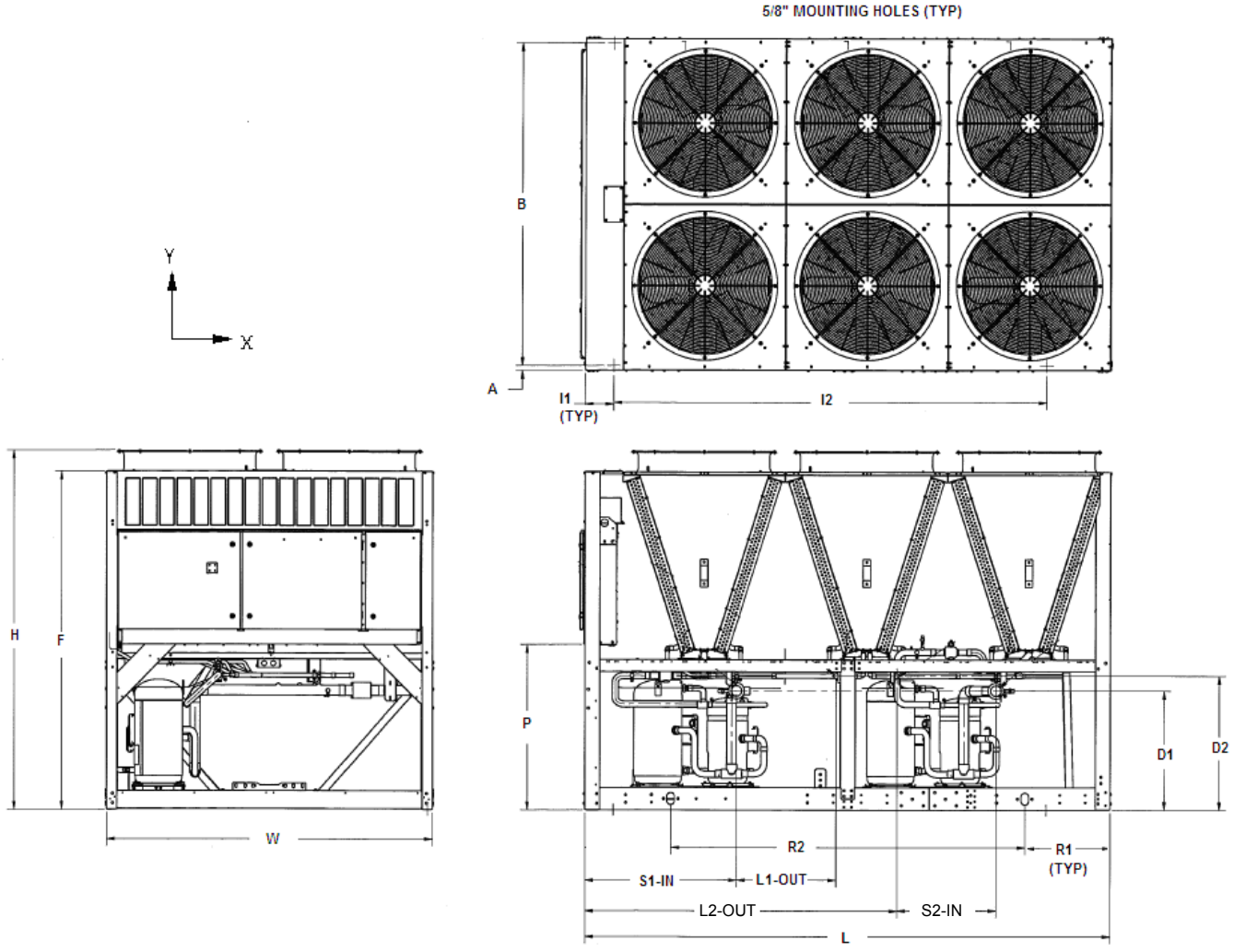

New Model	Length	Width	Height			Connection Sizes		System 1 Dimensions		System 2 Dimensions	
	L	W	H	F	P	Suction In 1 / 2	Liquid Out 1 / 2	Suction In	Liquid Out	Suction In	Liquid Out
YLUA0308YE	*143.5*	*88.3*	95.3	89.7	43.9	2.7	1.1	41	26.9	26.9	84.4
YLUA0338YE	*143.5*	*88.3*	95.3	89.7	43.9	2.7	1.1	41	-17.1	26.9	84.4
YLUA0408YE	*143.5*	*88.3*	95.3	89.7	43.9	2.7	1.1	41	26.9	26.9	84.4

New Model		Isolator Location Dimensions										Rigging Hole Locations			
	D2	I1	I2	I3	I4	I5	I6	I7	I8	A	B	R1	R2	R3	R4
YLAA0308YE	35.5	7.6	117.2							1.4	85.5	23.2	95.9		
YLAA0338YE	35.5	7.6	117.2							1.4	85.5	23.2	95.9		
YLAA0408YE	35.5	7.6	117.2							1.4	85.5	23.2	95.9		

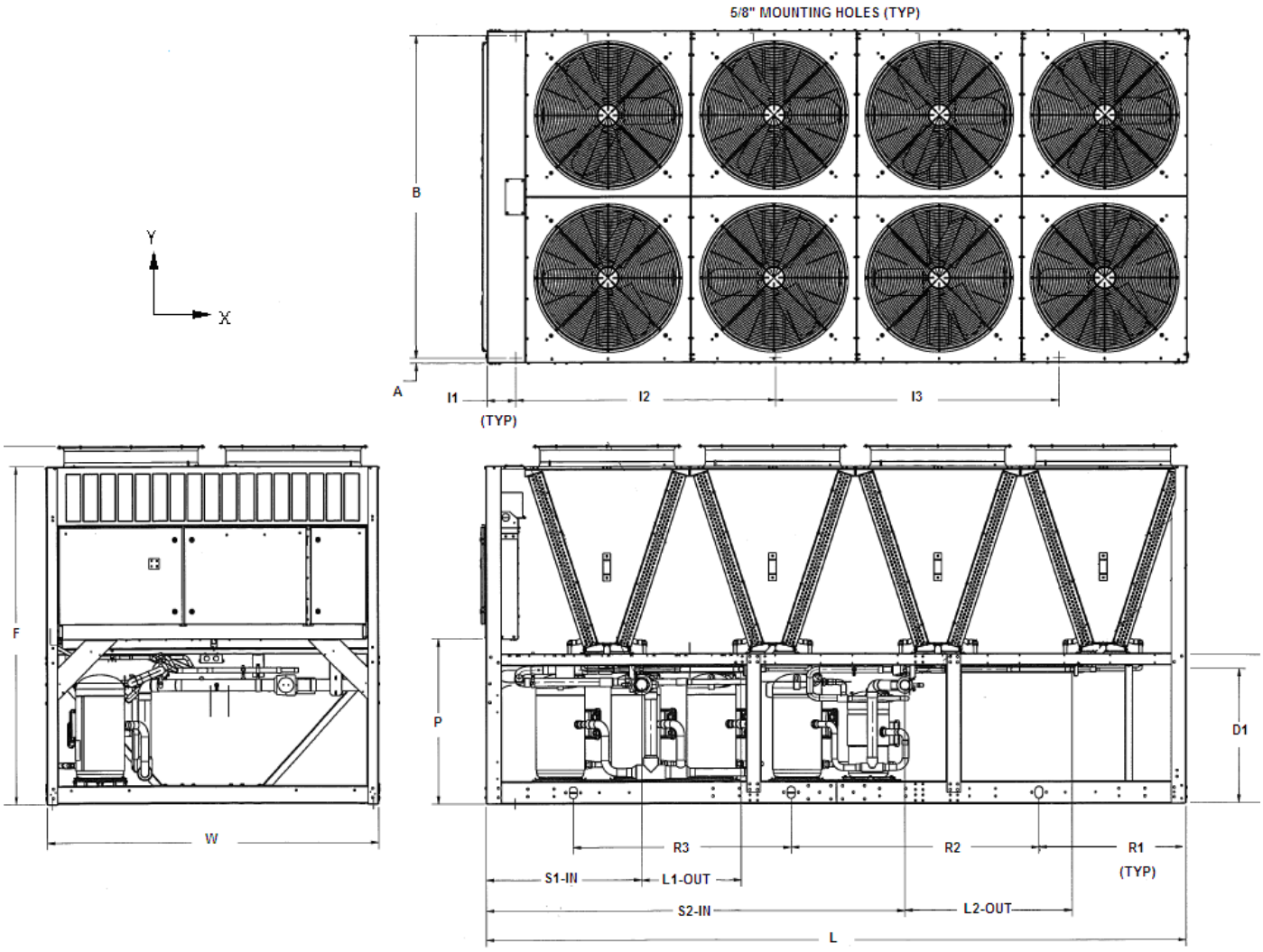

New Model	Length	Width	Height			Connection Sizes		System 1 Dimensions		System 2 Dimensions	
	L	W	H	F	P	Suction In 1 / 2	Liquid Out 1 / 2	Suction In	Liquid Out	Suction In	Liquid Out
YLUA0468YE	*187.5*	*88.3*	95.3	89.7	43.9	3.1 / 2.7	1.4 / 1.1	41.4	26.5	111.3	44.7
YLUA0498YE	*187.5*	*88.3*	95.3	89.7	43.9	3.1 / 2.7	1.4 / 1.1	41.4	26.5	111.3	44.7

New Model		Isolator Location Dimensions										Rigging Hole Locations			
	D2	I1	I2	I3	I4	I5	I6	I7	I8	A	B	R1	R2	R3	R4
YLAA0468YE	35.5	7.6	69	*80*						1.4	85.5	39	66	58	
YLAA0498YE	35.5	7.6	69	*80*						1.4	85.5	39	66	58	

Isolator Details

ONE INCH DEFLECTION SPRING ISOLATOR CROSS-REFERENCE

CP

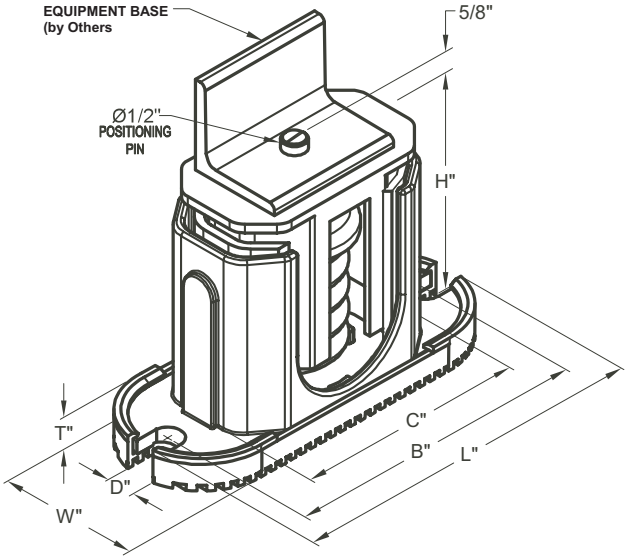

MOUNT TYPE	DIMENSION DATA (INCHES)						
	W	D	L	B	C	T	H
CP1	3	5/8	7-3/4	6-1/2	4-3/4	1/2	5-5/8
CP2	3	5/8	10-1/2	9-1/4	7-3/4	9/16	6

MODEL NUMBER	COLOR CODE	RATED CAPACITY (FOR UNITS WITH ALL LOAD POINTS LESS THAN 1785 LBS (810 KG))	
		(LBS.)	(KG)
CP-1D-510	BLACK	Up thru 434	Up thru 197
CP-1D-900	DARK GREEN	435 thru 765	198 thru 347
CP-1D-1200	GRAY	766 thru 1020	348 thru 463
CP-1D-1360	WHITE	1021 thru 1156	464 thru 524
CP-1D-1785N	GRAY/RED	1157 thru 1785	525 thru 810

MODEL NUMBER	COLOR CODE	RATED CAPACITY (FOR UNITS WITH ANY LOAD POINT ABOVE 1518 LBS (689 KG))	
		(LBS.)	(KG)
C2P-1D-1350	DARK PURPLE	Up thru 1148	Up to 521
C2P-1D-1350	DARK PURPLE	Up thru 1148	Up to 521
C2P-1D-1800	DARK GREEN	1149 thru 1530	522 - 694
C2P-1D-2400	GRAY	1531 thru 2040	695 - 925
C2P-1D-2400	GRAY	1531 thru 2040	695 - 925
C2P-1D-2720	WHITE	2041 thru 2312	926 - 1049
C2P-1D-3570N	GRAY/RED	2313 thru 3570	1050 - 1619

ELASTOMERIC ISOLATOR CROSS-REFERENCE

RD-Style Isolators

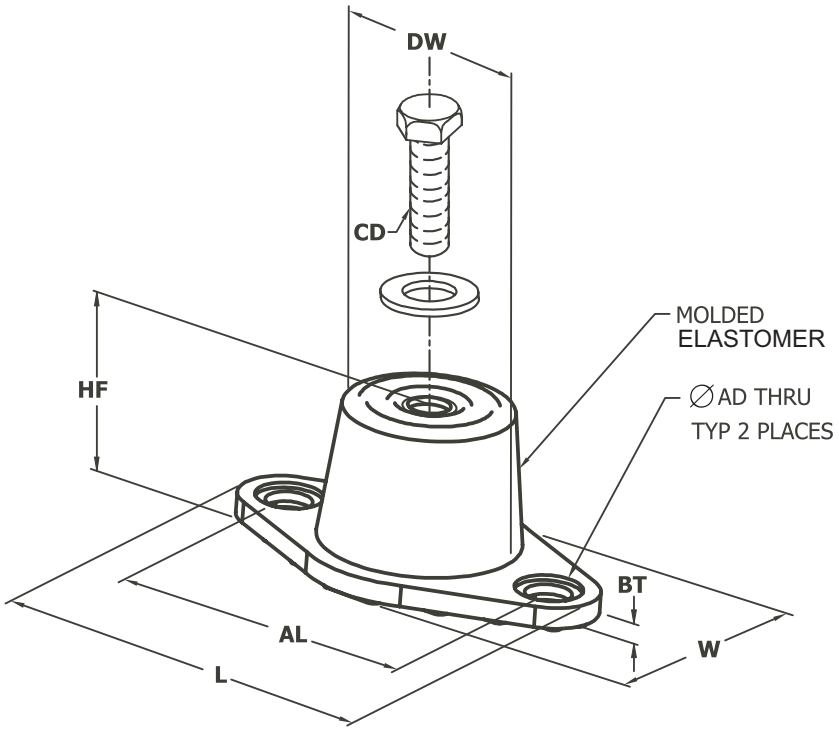

MOUNT TYPE	DIMENSION DATA (INCHES)							
	L	W	HF	AL	AD	BT	CD	DW
RD1-WR	3.13	1.75	1.25	2.38	0.34	0.19	5/16-18 UNC X 3/4	1.25
RD2-WR	3.88	2.38	1.75	3.00	0.34	0.22	3/8-16 UNC X 1	1.75
RD3-WR	5.50	3.38	2.88	4.13	0.56	0.25	1/2-13 UNC X 1	2.50
RD4-WR	6.25	4.63	2.75	5.00	0.56	0.38	1/2-13 UNC X 1	3.00

VMC PART NUMBER	VMC ISOL. COLOR	WEIGHT RANGE (LBS)	WEIGHT RANGE (KGS)
RD-3-CHARCOAL-WR	CHARCOAL	Up thru 825	UP TO 374
RD-4-BRICK RED-WR	BRICK RED	826 thru 1688	375 - 766
RD-4-CHARCOAL-WR	CHARCOAL	1689 thru 4000	767 - 1814

Isolator Details - continued

TWO INCH DEFLECTION, SEISMIC SPRING ISOLATOR CROSS-REFERENCE

Y2RS

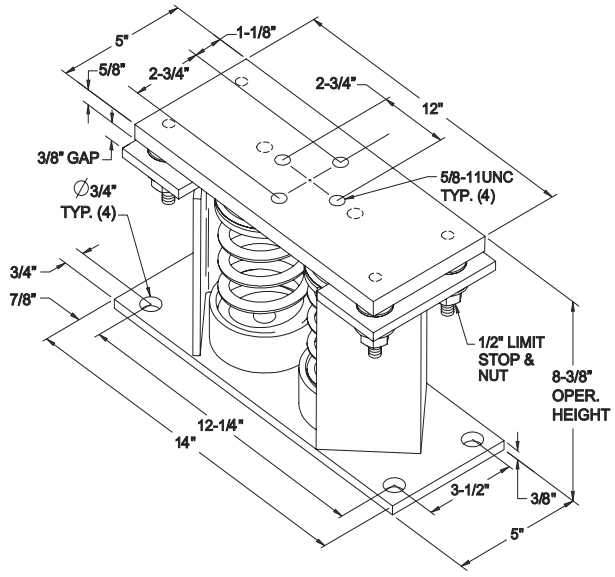

PART NUMBER	ISOLATOR SPRING COLOR	WEIGHT RANGE (LBS)	WEIGHT RANGE (KGS)
Y2RSI-2D-460	GREEN	Up thru 391	UP TO 177
Y2RSI-2D-460	GREEN	Up thru 391	UP TO 177
Y2RSI-2D-710	DARK BROWN	392 thru 604	178 - 274
Y2RSI-2D-870	RED	605 thru 740	275 - 336
Y2RSI-2D-1200N	RED/BLACK	741 thru 1020	337 - 463
Y2RSI-2D-1690	PINK	1021 thru 1437	464 - 652
Y2RSI-2D-2640N	PINK/GRAY	1438 thru 2244	653 - 1018
Y2RSI-2D-2870N	PINK/GRAY/ORANGE	2245 thru 2618	1019 - 1188
Y2RSI-2D-3280N	PINK/GRAY/DK.BROWN	2619 thru 3740	1189 - 1696

Isolator Locations

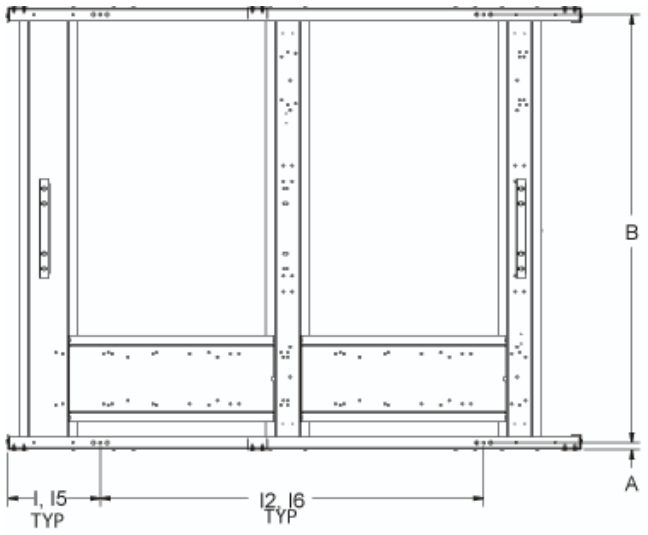

AVM LOCATIONS				
YLUA MODEL	I1	I2	A	B
YLU-A0248YE	19.5	76.6	1.36	85.5
YLU-A0278YE	19.5	76.6	1.36	85.5
YLU-A0298YE	19.5	76.6	1.36	85.5

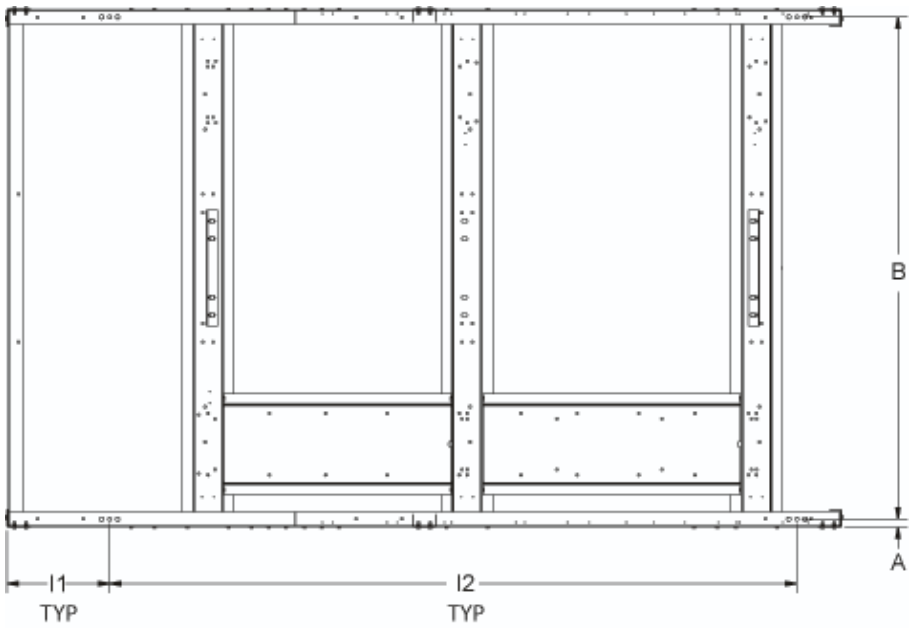

YLUA MODEL	AVM LOCATIONS			
	I1	I2	A	B
YLUA0308YE	7.6	117.2	1.4	85.5
YLUA0338YE	7.6	117.2	1.4	85.5
YLUA0408YE	7.6	117.2	1.4	85.5

Isolator Locations - continued

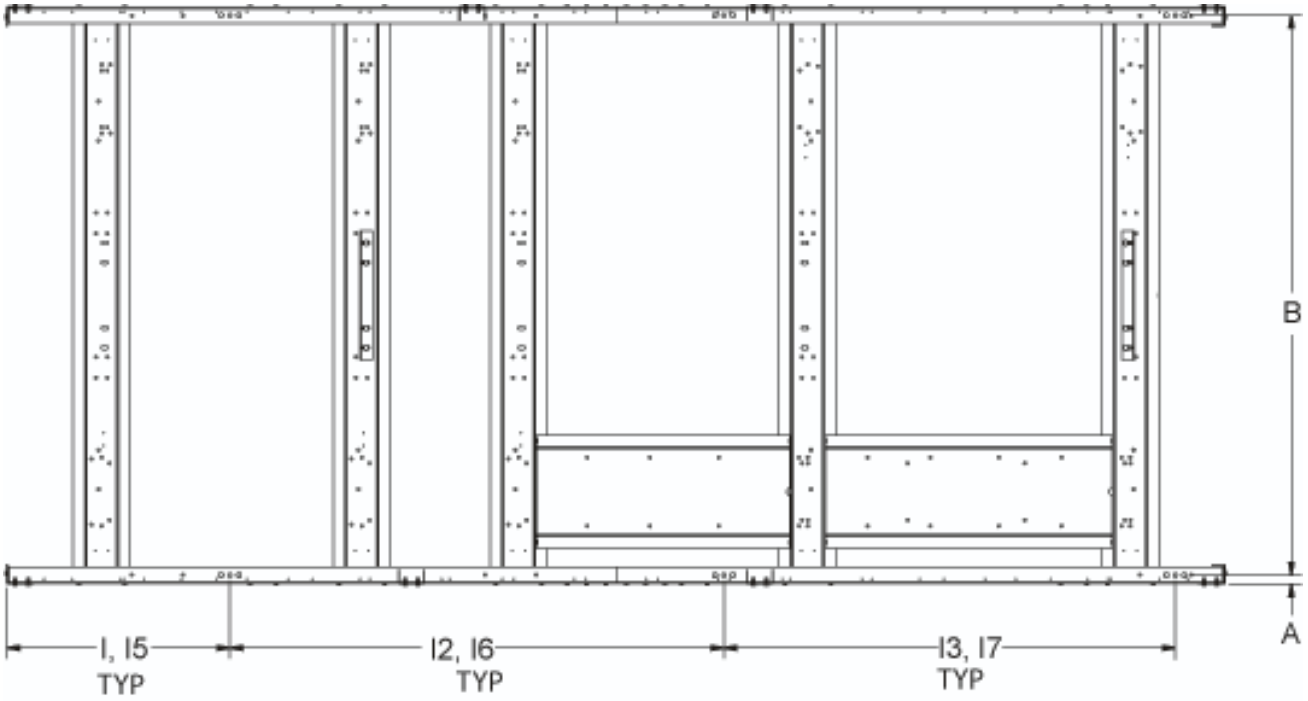

YLUA MODEL	AVM LOCATIONS				
	I1	I2	I3	A	B
YLUA0468YE	7.6	69.0	80.0	1.4	85.5
YLUA0498YE	7.6	69.0	80.0	1.4	85.5

Electrical Notes

NOTES:

1. Minimum Circuit Ampacity (MCA) is based on 125% of the rated load amps for the largest motor plus 100% of the rated load amps for all other loads included in the circuit, per N.E.C. Article 430-24. If the optional Factory Mounted Control Transformer is provided, add the following MCA values to the electrical tables for the system providing power to the transformer: -17, add 2.5 amps; -28, add 2.3 amps; -40, add 1.5 amps, -46, add 1.3 amps; -58, add 1 amps.

2. The minimum recommended disconnect switch is based on 115% of the rated load amps for all loads included in the circuit, per N.E.C. Article 440.

3. Minimum fuse size is based upon 150% of the rated load amps for the largest motor plus 100% of the rated load amps for all other loads included in the circuit to avoid nuisance trips at start-up due to lock rotor amps. It is not recommended in applications where brown outs, frequent starting and stopping of the unit, and/or operation at ambient temperatures in excess of 95ºF (35ºC) is anticipated.

4. Maximum fuse size is based upon 225% of the rated load amps for the largest motor plus 100% of the rated load amps for all other loads included in the circuit, per N.E.C. Article 440-22.

5. Circuit breakers must be UL listed and CSA certified and maximum size is based on 225% of the rated load amps for the largest motor plus 100% of the rated load amps for all other loads included in the circuit. Otherwise, HACR-type circuit breakers must be used. Maximum HACR circuit breaker rating is based on 225% of the rated load amps for the largest motor plus 100% of the rated load amps for all other loads included in the circuit.

6. The “INCOMING WIRE RANGE” is the minimum and maximum wire size that can be accommodated by the unit wiring lugs. The (2) preceding the wire range indicates the number of termination points available per phase of the wire range specified. Actual wire size and number of wires per phase must be determined based on the National Electrical Code, **using copper connectors only**. Field wiring must also comply with local codes.

7. A ground lug is provided for each compressor system to accommodate a field grounding conductor per N.E.C. Table 250-95. A control circuit grounding lug is also supplied.

8. The supplied disconnect is a “Disconnecting Means” as defined in the N.E.C. 100, and is intended for isolating the unit for the available power supply to perform maintenance and troubleshooting. This disconnect is not intended to be a Load Break Device.

9. Field Wiring by others which complies to the National Electrical Code & Local Codes.

LEGEND

ACR-LINE	ACROSS THE LINE START
C.B.	CIRCUIT BREAKER
D.E.	DUAL ELEMENT FUSE
DISC SW	DISCONNECT SWITCH
FACT MOUNT CB	FACTORY MOUNTED CIRCUIT BREAKER
FLA	FULL LOAD AMPS
HZ	HERTZ
MAX	MAXIMUM
MCA	MINIMUM CIRCUIT AMPACITY
MIN	MINIMUM
MIN NF	MINIMUM NON FUSED
RLA	RATED LOAD AMPS
S.P. WIRE	SINGLE POINT WIRING
UNIT MTD SERV SW	UNIT MOUNTED SERVICE (NON-FUSED DISCONNECT SWITCH)
LRA	LOCKED ROTOR AMPS

VOLTAGE CODE

50 = 380/415-3-50

Electrical Data

CHILLER MODEL	VOLT CODE	OVERALL UNIT				DUAL POINT ELECTRICAL DATA							
		SINGLE POINT ELECTRICAL DATA				SYSTEM 1				SYSTEM 2			
		MCA	MIN N/F DS	MIN DUAL ELEM FUSE MIN CB	MAX DUAL ELEM FUSE MAX CB	MINIMUM CIRCUIT AMPS	MIN N/F DISC SW	MIN DUAL ELEM FUSE & MIN CB	MAX DUAL ELEM FUSE & MAX CB	MINIMUM CIRCUIT AMPS	MIN N/F DISC SW	MIN DUAL ELEM FUSE & MIN CB	MAX DUAL ELEM FUSE & MAX CB
0248	50	152	200	175	175	79	100	90	100	79	100	90	100
0278	50	163	200	175	175	90	100	100	110	79	100	90	100
0298	50	184	200	200	225	90	100	100	110	101	150	125	150
0308	50	197	250	225	250	105	150	125	150	105	150	125	150
0338	50	222	250	250	250	90	100	100	110	139	150	175	175
0408	50	256	400	300	300	135	150	150	175	135	150	150	175
0468	50	289	400	350	350	193	250	225	225	109	150	125	150
0498	50	318	400	350	350	193	250	225	225	139	150	175	175

CHILLER MODEL	VOLT CODE	SYSTEM # 1									SYSTEM # 2								
		COMPR 1		COMPR 2		COMPR 3		FAN			COMPR 1		COMPR 2		COMPR 3		FAN		
		RLA	LRA	RLA	LRA	RLA	LRA	QTY	FLA	LRA	RLA	LRA	RLA	LRA	RLA	LRA	QTY	FLA	LRA
0248	50	22	140	22	140	22	140	2	4	19.0	22	140	22	140	22	140	2	4	19.0
0278	50	25	198	25	198	25	198	2	4	19.0	22	140	22	140	22	140	2	4	19.0
0298	50	25	198	25	198	25	198	2	4	19.0	55	310	25	198			2	4	19.0
0308	50	25	310	25	198			3	4	19.0	55	310	25	198			3	4	19.0
0338	50	25	198	25	198	25	198	2	4	19.0	55	310	55	310			4	4	19.0
0408	50	55	310	55	310			3	4	19.0	55	310	55	310			3	4	19.0
0468	50	55	310	55	310	55	310	4	4	19.0	55	310	25	198			4	4	19.0
0498	50	55	310	55	310	55	310	4	4	19.0	55	310	55	310			4	4	19.0

Electrical Drawings

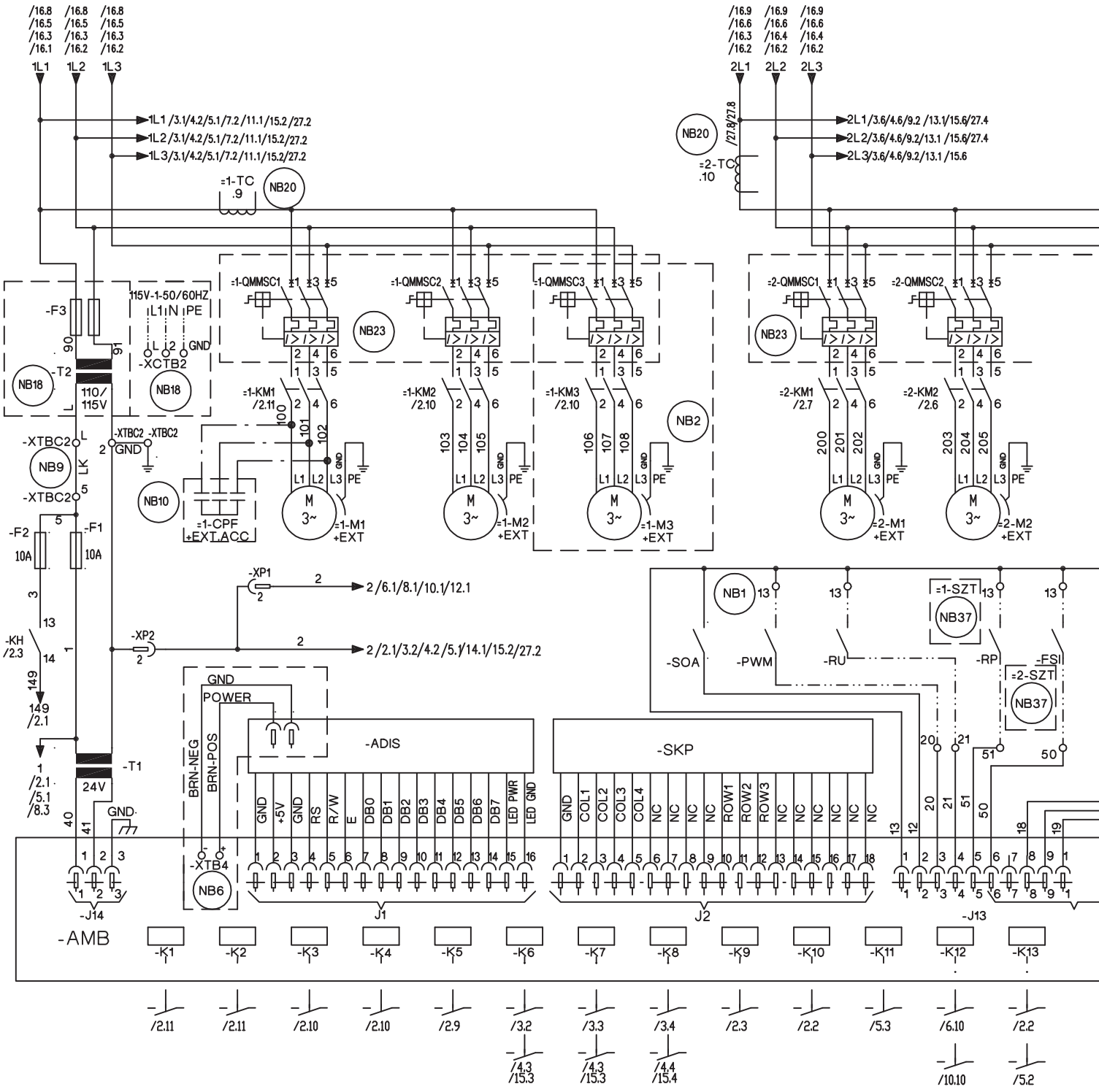

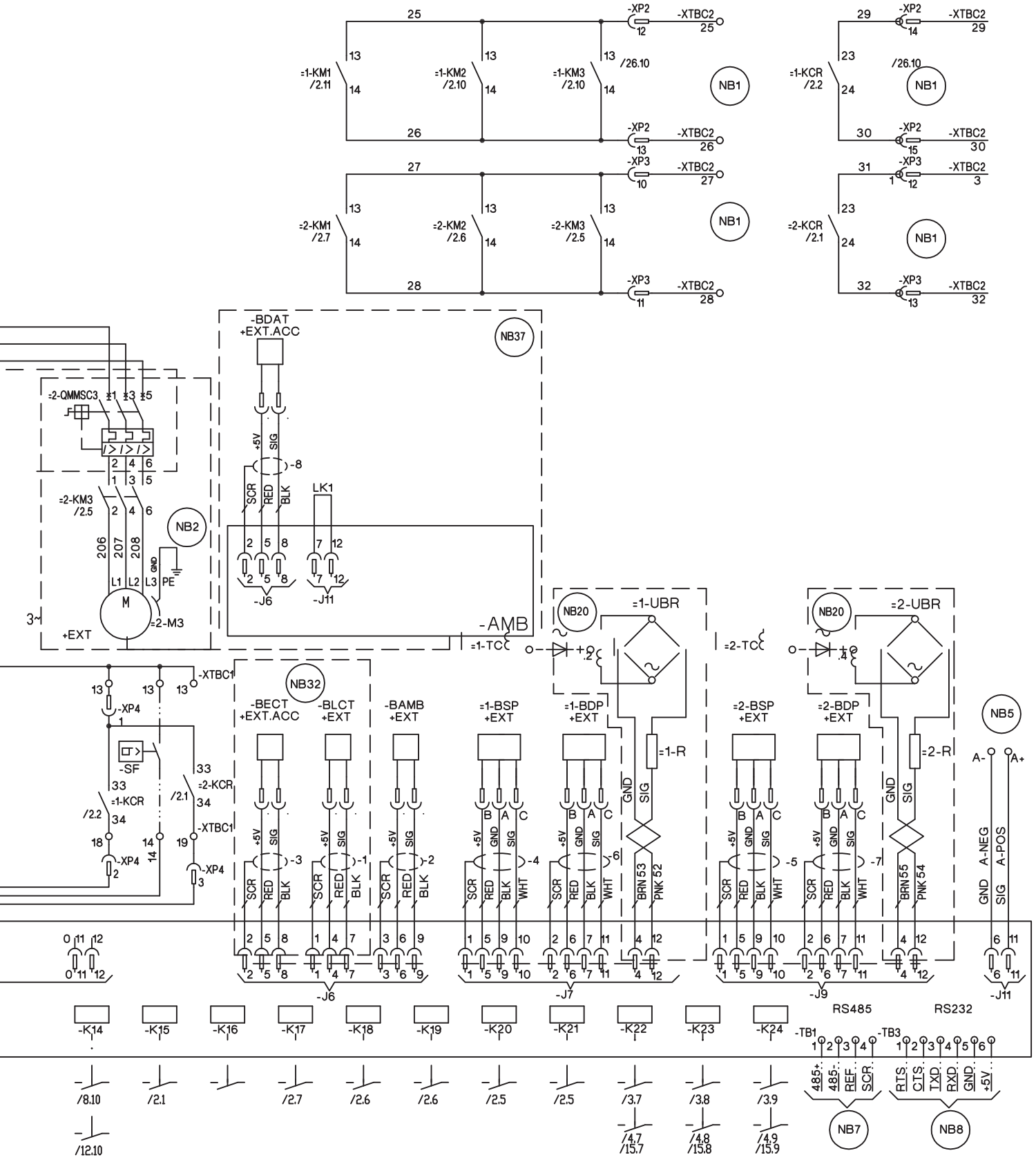
-XP2
-XTBC2
=1-KM1 /2.11
=1-KM2 /2.10
=1-KM3 /2.10
/26.10
NB1
=1-KCR /2.2
-XP3
=2-KM1 /2.7
=2-KM2 /2.6
=2-KM3 /2.5
=2-KCR /2.1
-BDAT +EXT.ACC
NB37
=2-QMMSC3
=2-KM3 /2.5
NB2
LK1
-J6
-J11
-AMB
=1-TC
=2-TC
NB20
=1-UBR
=2-UBR
+EXT
-XTBC1
-XP4
-SF
-KCR
NB32
-BECT +EXT.ACC
-BLCT +EXT
-BAMB +EXT
=1-BSP +EXT
=1-BDP +EXT
=2-BSP +EXT
=2-BDP +EXT
=1-R
=2-R
NB5
A-
A+
A-NEG
A-POS
SCR
RED
BLK
WHT
BRN 53
PNK 52
BRN 55
PNK 54
-J7
-J9
-J11
RS485
RS232
-K14
-K15
-K16
-K17
-K18
-K19
-K20
-K21
-K22
-K23
-K24
-TB1
-TB3
485+
485-
REF
SCR
RTS
CTS
TXD
RXD
GND
+5V
NB7
NB8
/8.10
/12.10
/2.1
/2.7
/2.6
/2.5
/3.7
/4.7
/15.7
/3.8
/4.8
/15.8
/3.9
/4.9
/15.9

Electrical Drawings - continued

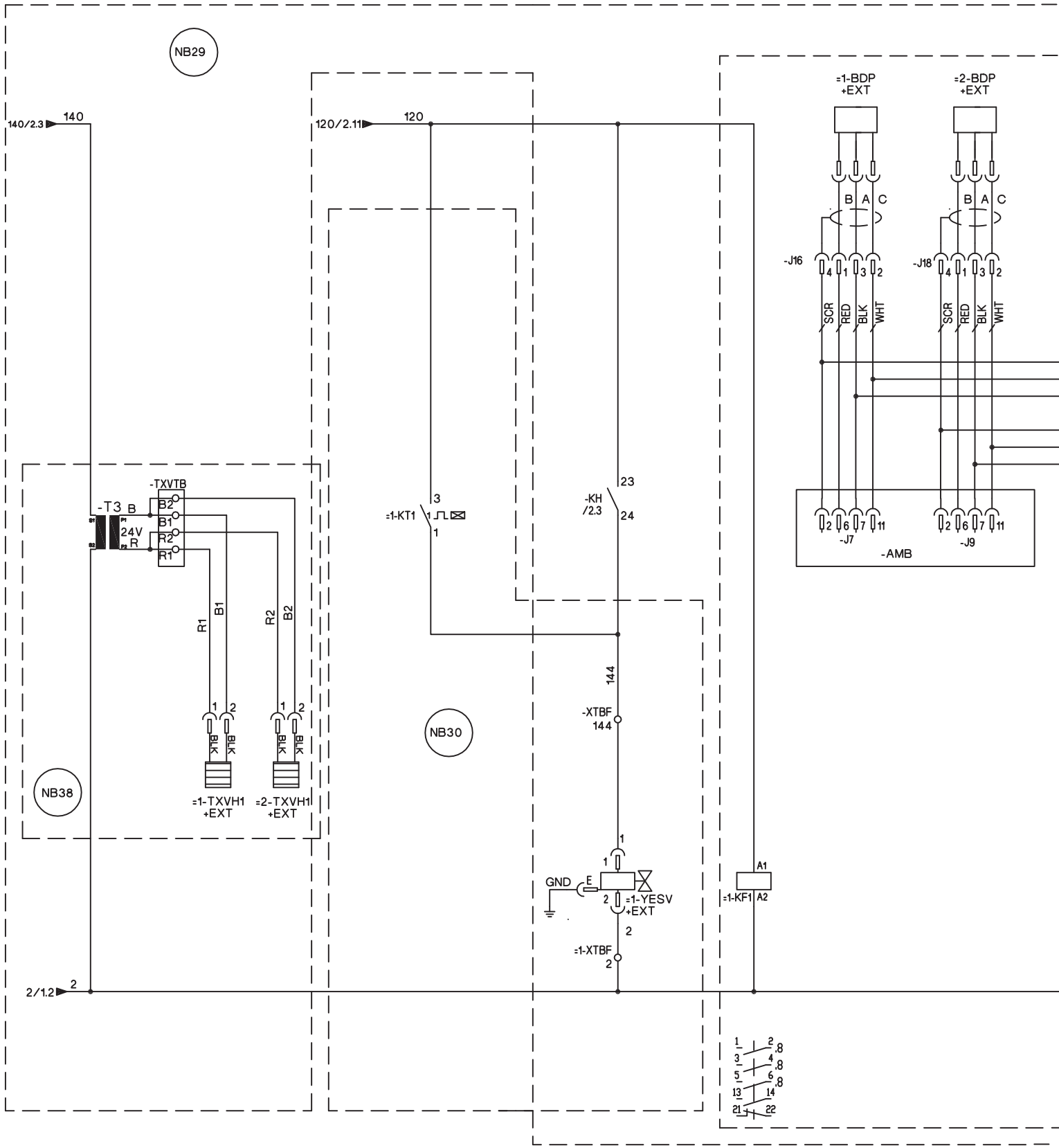

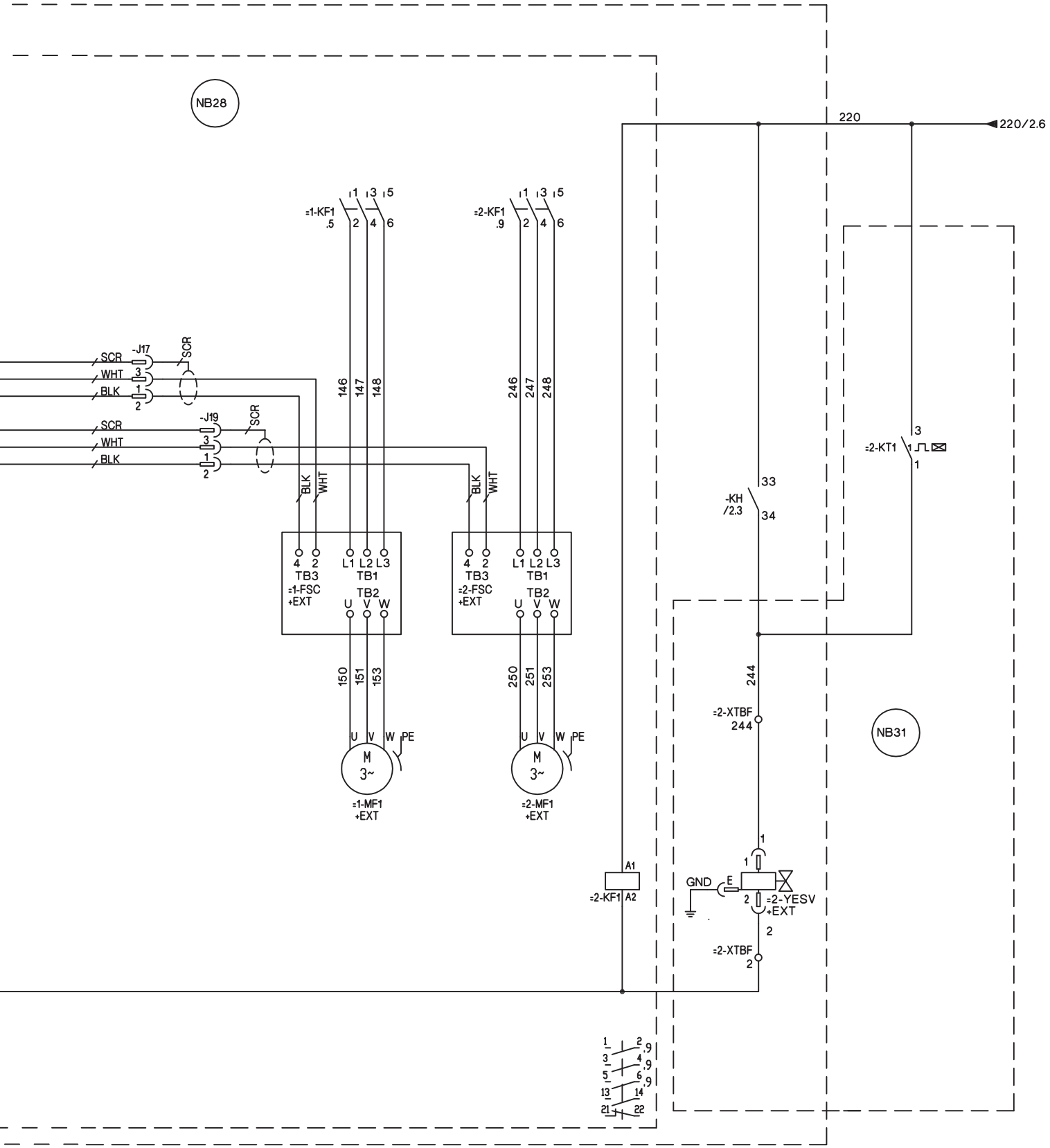
NB28
220
220/2.6
=1-KF1
.5
=2-KF1
.9
SCR
WHT
BLK
-J17
-J19
146
147
148
246
247
248
BLK
WHT
4 2
L1 L2 L3
TB3
=1-FSC
+EXT
TB1
TB2
U V W
=2-FSC
+EXT
150
151
153
250
251
253
PE
M
3~
=1-MF1
+EXT
=2-MF1
+EXT
-KH
/2.3
33
34
=2-KT1
244
=2-XTBF
244
NB31
A1
=2-KF1 A2
GND
E
=2-YESV
+EXT
=2-XTBF
2

Electrical Drawings - continued

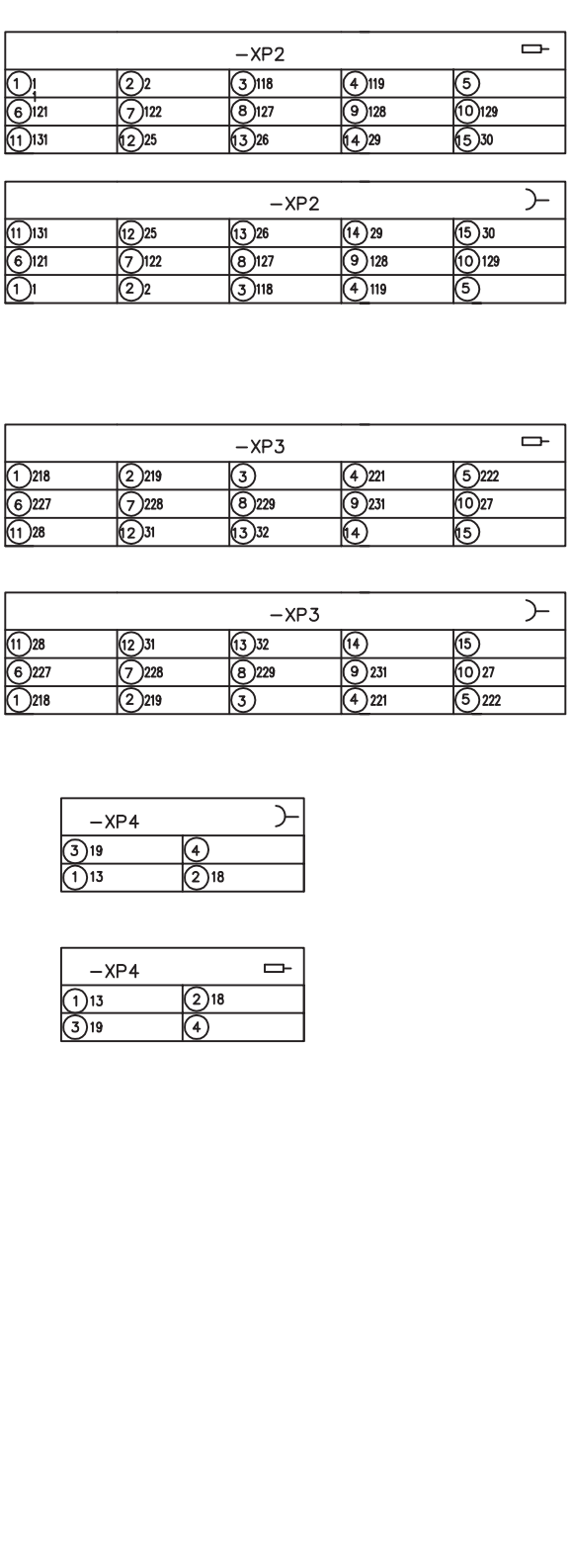

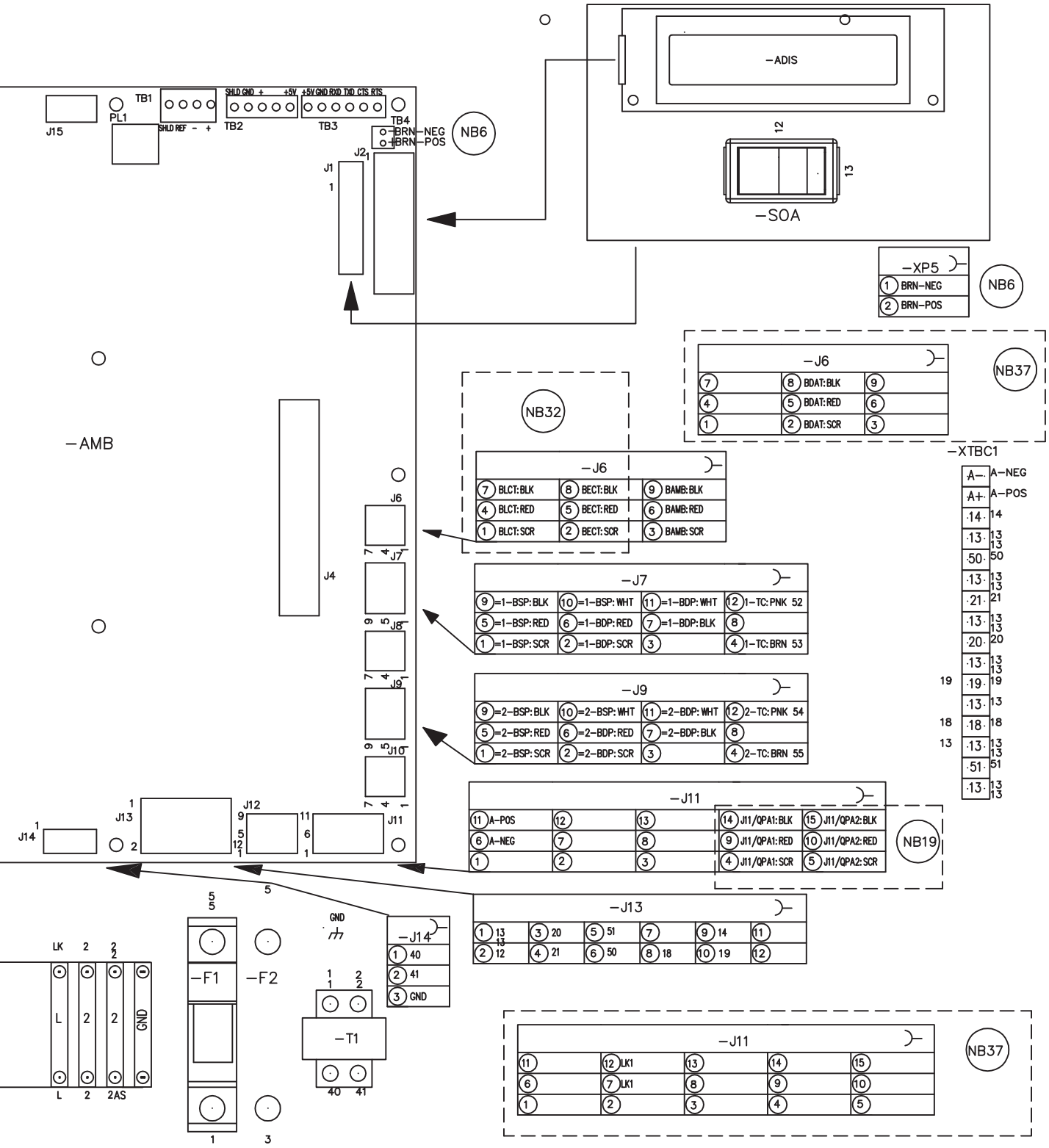
–ADIS
–SOA
–AMB
TB1
TB2
TB3
TB4
PL1
J15
SHLD GND + +5V
SHLD REF – +
+5V GND RXD TXD CTS RTS
BRN–NEG
BRN–POS
NB6
J1
J2
J4
J6
J7
J8
J9
J10
J11
J12
J13
J14
–XP5
1 BRN–NEG
2 BRN–POS
NB37
–J6
7 8 BDAT:BLK 9
4 5 BDAT:RED 6
1 2 BDAT:SCR 3
NB32
–J6
7 BLCT:BLK 8 BECT:BLK 9 BAMB:BLK
4 BLCT:RED 5 BECT:RED 6 BAMB:RED
1 BLCT:SCR 2 BECT:SCR 3 BAMB:SCR
–J7
9 =1–BSP:BLK 10 =1–BSP:WHT 11 =1–BDP:WHT 12 1–TC:PNK 52
5 =1–BSP:RED 6 =1–BDP:RED 7 =1–BDP:BLK 8
1 =1–BSP:SCR 2 =1–BDP:SCR 3 4 1–TC:BRN 53
–J9
9 =2–BSP:BLK 10 =2–BSP:WHT 11 =2–BDP:WHT 12 2–TC:PNK 54
5 =2–BSP:RED 6 =2–BDP:RED 7 =2–BDP:BLK 8
1 =2–BSP:SCR 2 =2–BDP:SCR 3 4 2–TC:BRN 55
–J11
11 A–POS 12 13 14 J11/QPA1:BLK 15 J11/QPA2:BLK
6 A–NEG 7 8 9 J11/QPA1:RED 10 J11/QPA2:RED
1 2 3 4 J11/QPA1:SCR 5 J11/QPA2:SCR
NB19
–J13
1 13 3 20 5 51 7 9 14 11
2 12 4 21 6 50 8 18 10 19 12
–J14
1 40
2 41
3 GND
–F1
–F2
–T1
GND
LK
L 2 2 GND
L 2 2AS
–XTBC1
A– A–NEG
A+ A–POS
14 14
13 13
50 50
21 21
20 20
19 19
18 18
51 51
–J11
11 12 LK1 13 14 15
6 7 LK1 8 9 10
1 2 3 4 5
NB37

Electrical Drawings - continued

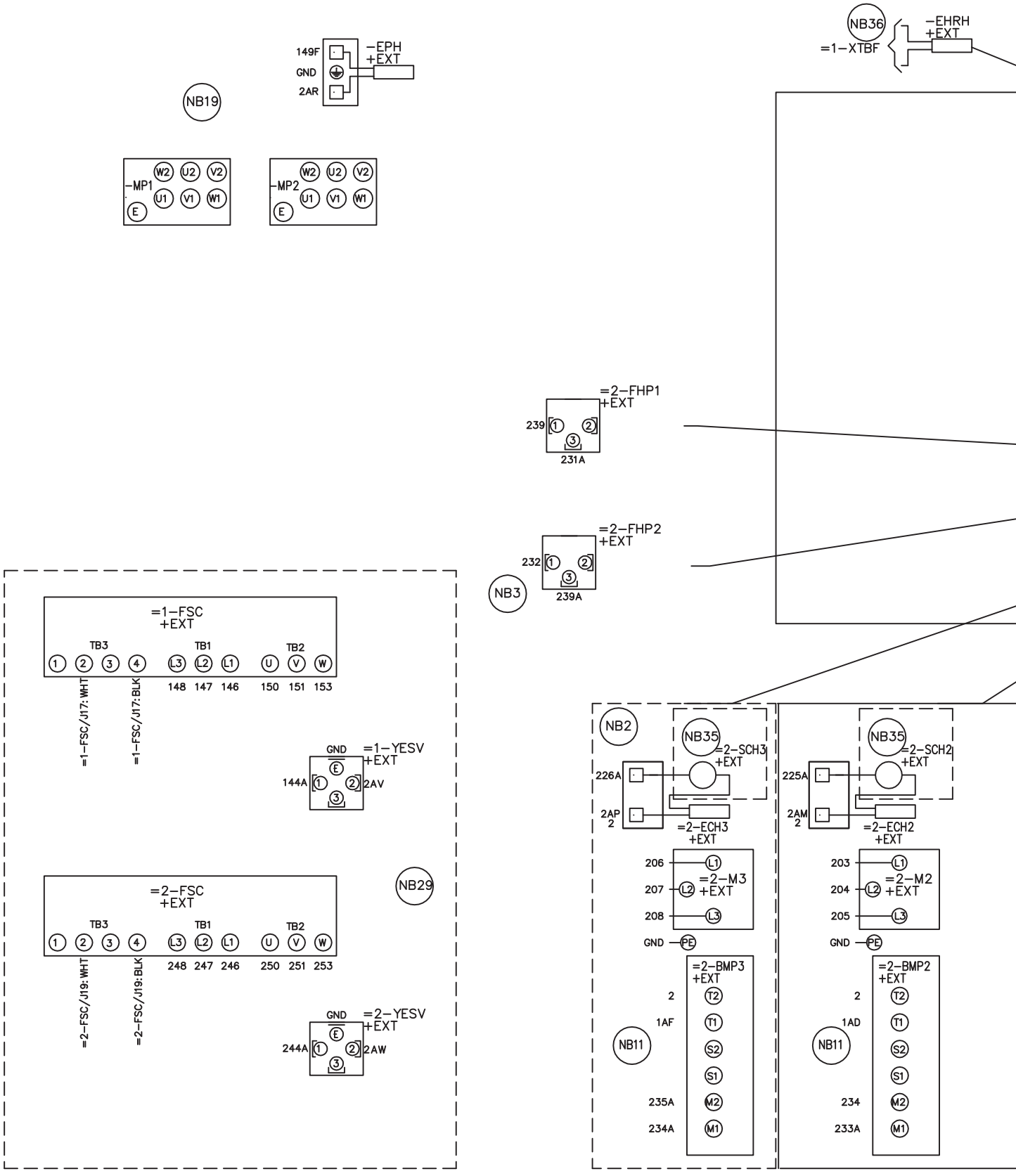

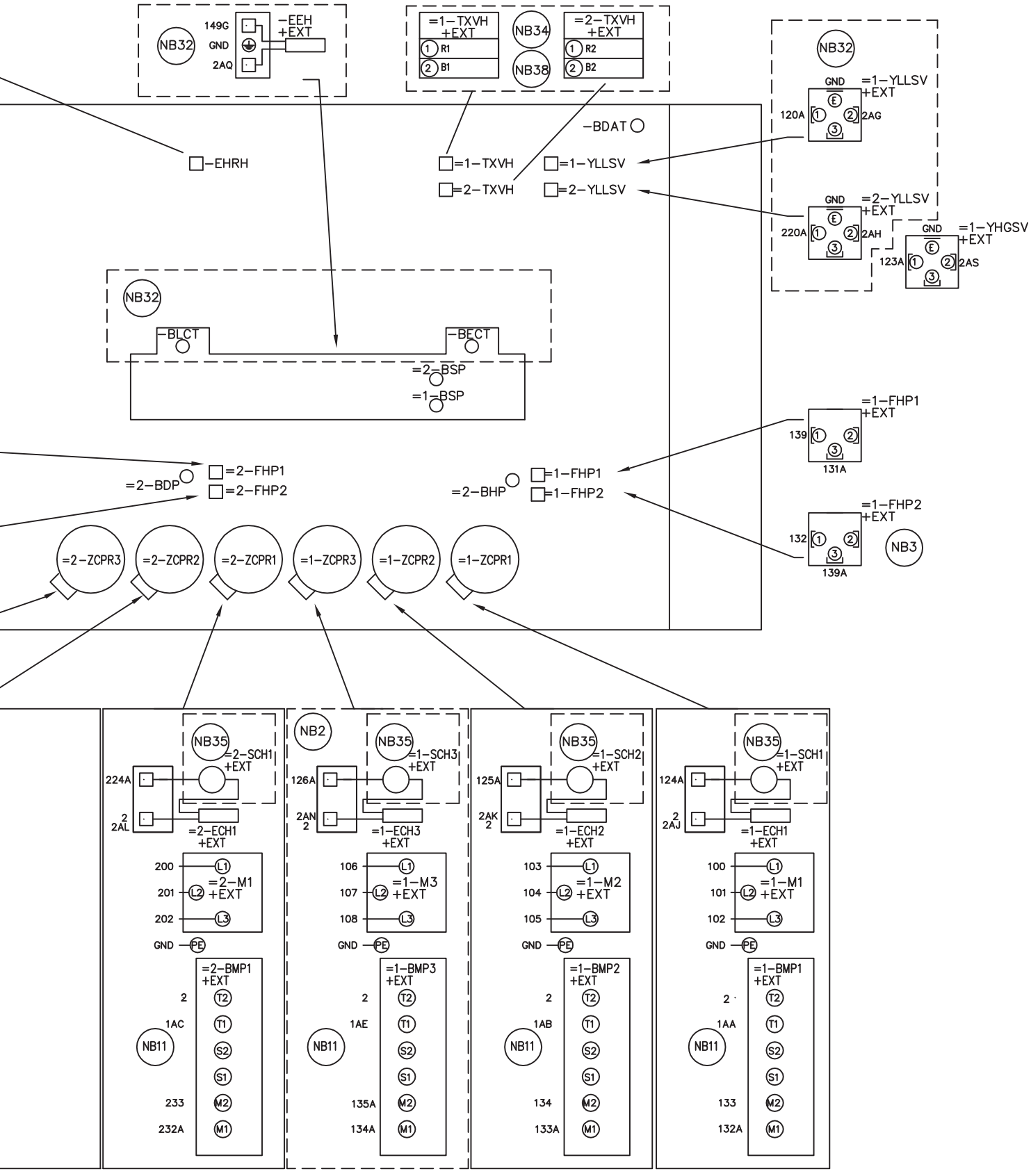
NB32
149G
GND
2AQ
-EEH
+EXT
=1-TXVH
+EXT
R1
B1
NB34
NB38
=2-TXVH
+EXT
R2
B2
NB32
GND
=1-YLLSV
+EXT
120A
2AG
-BDAT
-EHRH
=1-TXVH
=2-TXVH
=1-YLLSV
=2-YLLSV
GND
=2-YLLSV
+EXT
220A
2AH
GND
=1-YHGSV
+EXT
123A
2AS
NB32
-BLCT
-BECT
=2-BSP
=1-BSP
=1-FHP1
+EXT
139
131A
=2-BDP
=2-FHP1
=2-FHP2
=2-BHP
=1-FHP1
=1-FHP2
=1-FHP2
+EXT
132
139A
NB3
=2-ZCPR3
=2-ZCPR2
=2-ZCPR1
=1-ZCPR3
=1-ZCPR2
=1-ZCPR1
NB2
NB35
=2-SCH1
+EXT
224A
2AL
=2-ECH1
+EXT
=1-SCH3
+EXT
126A
2AN
=1-ECH3
+EXT
=1-SCH2
+EXT
125A
2AK
=1-ECH2
+EXT
=1-SCH1
+EXT
124A
2AJ
=1-ECH1
+EXT
200
201
202
=2-M1
+EXT
106
107
108
=1-M3
+EXT
103
104
105
=1-M2
+EXT
100
101
102
=1-M1
+EXT
GND
PE
=2-BMP1
+EXT
=1-BMP3
+EXT
=1-BMP2
+EXT
=1-BMP1
+EXT
NB11
1AC
1AE
1AB
1AA
T2
T1
S2
S1
M2
M1
233
232A
135A
134A
134
133A
133
132A

Electrical Drawings - continued

Designation	DESCRIPTION
ACC	ACCESSORY
- ADIS	DISPLAY BOARD
- AMB	MICRO BOARD
- BAMB	AMBIENT
-BDAT	DISCHARGE AIR TEMPERATURE
- BDP	DISCHARGE PRESSURE
- BECT	ENTERING CHILLED TEMPERATURE
- BLCT	LEAVING CHILLED TEMPERATURE
	NOT FITTED ON REMOTE EVAP. UNITS
-BMP	MOTOR PROTECTOR COMPRESSOR
- BSP	SUCTION PRESSURE
-CPF	CAPACITOR POWER FACTOR
- ECH	CRANKCASE HEATER
-EEH	EVAPORATOR HEATER
-EHRH	HEAT RECOVERY HEATER
-EPH	PUMP HEATER
-EXT	EXTERNAL TO CONTROL PANEL
- F	FUSE
- FHP	HIGH PRESSURE CUTOUT
-FSC	FAN SPEED CONTROLLER
-FSI	FAN SPEED INHIBIT TWO SPEED FAN OPTION ONLY
GND	GROUND
G/Y	GREEN / YELLOW
J	PLUG BOARD CONNECTOR
-K	CIRCUIT BOARD RELAY
-KF	(INCLUDING COIL SUPPRESSOR)
-KFH	FAN CONTACTOR HIGH SPEED (INCLUDING COIL SUPPRESSOR)
-KFL	FAN CONTACTOR LOW SPEED (INCLUDING COIL SUPPRESSOR)
-KFOL	FAN OVERLOAD
-KFS	RELAY FAN SPEED
-KH	HEATER RELAY
-KM	COMPRESSOR CONTACTOR (INCLUDING COIL SUPPRESSOR)
-KCR	CONTROL RELAY
-KP	PUMP CONTACTOR PART (INCLUDING COIL SUPPRESSOR)
-KT	RELAY TIMER
- M	COMPRESSOR MOTOR
-MF	MOTOR FAN
-MP	MOTOR PUMP
NU	NOT USED
PE	PROTECTIVE EARTH
PWM	PULSE WIDTH MODULATION TEMP RESET or REMOTE UNLOAD 2nd STEP

Designation	DESCRIPTION
-QCB	CIRCUIT BREAKER
-QMMSC	MANUAL MOTOR STARTER COMPRESSOR
-QMMSP	MANUAL MOTOR STARTER PUMP
-QSD	SWITCH DISCONNECT
R	RESISTOR
RED	RED
RP	RUN PERMISSIVE
RU	REMOTE UNLOAD Ist STEP
SCH	THERMOSTAT CRANKCASE HEATER
SCR	SCREEN
- SF	FLOW SWITCH
- SKP	KEYPAD
- SOA	SWITCH OFF AUTO
-SZT	ZONE THERMOSTAT
- T	TRANSFORMER
-TC	TRANSFORMER CURRENT
-UBR	BRIDGE RECTIFIER
-WHT	WHITE
-XP	PLUGS BETWEEN POW./MICRO. SECTION
- XTBC	TERMINAL BLOCK CUSTOMER
- XTBF	TERMINAL BLOCK FACTORY
-YESV	EVAPORATOR SOLENOID VALVE
-YHGSV	HOT GAS SOLENOID VALVE (INCLUDING COIL SUPPRESSOR)
- YLLSV	LIQUID LINE SOLENOID VALVE FIELD MOUNTED AND WIRED ON REMOTE EVAP. UNIT
- ZCPR	COMPRESSOR
(NB)	NOTE WELL {SEE NOTE}
-·-·-·-	WIRING AND ITEMS SHOWN THUS ARE STANDARD YORK ACCESSORIES
-··-··-··	WIRING AND ITEMS SHOWN THUS ARE NOT SUPPLIED BY YORK
— — —	ITEMS THUS ENCLOSED FORM A COMPONENTS OR SETS OFCOMPONENTS

GENERAL	
a.	THIS DRAWING IS BASED ON IEC SYMBOLS.
b.	FIELD WIRING TO BE IN ACCORDANCE WITH THE RELEVANT ELECTRICAL CODE AS WELL AS ALL OTHER APPLICABLE CODES AND SPECIFICATIONS
c.	ALL SOURCES OF SUPPLY SHOWN ON THIS DIAGRAM TO BE TAKEN FROM ONE MAIN ISOLATOR, NOT SHOWN OR SUPPLIED BY YORK.
d.	GREEN AND YELLOW WIRE IS USED FOR EARTH, MULTI-COLOURED CABLE USED FOR LOW VOLTAGE. RED WIRE USED FOR A.C. CONTROL, BLUE WIRE FOR NEUTRAL, BLACK WIRE FOR A.C. AND D.C. POWER. ORANGE WIRE SHOULD BE USED FOR INTERLOCK CONTROL WIRING SUPPLIED BY EXTERNAL SOURCE.
e.	LEGEND DESIGNATION DEPICTS COMPONENT ABBREVIATIONS. NUMBER PREFIX LOCATED, IF APPLICABLE, ON SCHEMATIC CIRCUIT, REFERS TO SYSTEM THEREON, E.G.= 1-FHP2 REFERS TO HIGH PRESSURE CUTOUT NO 2 ON SYSTEM NO 1.
f.	ALL WIRING TO CONTROL SECTION VOLTAGE FREE CONTACTS REQUIRES A SUPPLY PROVIDED BY THE DERIVING THE SUPPLIES FOR THE VOLTAGE FREE TERMINALS WITH REGARD TO A COMMON POINT OF ISOLATION. THUS, THESE CIRCUITS WHEN USED MUST BE FED VIA THE COMMON POINT OF ISOLATION THE VOLTAGE TO THESE CIRCUITS IS REMOVED WHEN THE COMMON POINT OF ISOLATION TO THE UNIT IS OPENED. THIS COMMON POINT OF ISOLATION IS NOT SUPPLIED BY YORK. THE YORK VOLTAGE FREE CONTACTS ARE RATED AT 100VA. ALL INDUCTIVE DEVICES {RELAYS} SWITCH BY THE YORK VOLTAGE FREE CONTACTS MUST HAVE THEIR COIL SUPPRESSED USING STANDARD R/C SUPPRESSORS.
g.	CUSTOMER VOLTAGE FREE CONTACTS CONNECTED TO TERMINAL 13 MUST BE RATED AT 30V 5ma
h.	NO CONTROLS {RELAYS ETC.} SHOULD BE MOUNTED IN ANY SECTION OF THE CONTROL PANEL. ADDITIONALLY, CONTROL WIRING NOT CONNECTED TO THE YORK CONTROL PANEL SHOULD NOT BE RUN THROUGH THE PANEL. IF THESE PRECAUTIONS ARE NOT FOLLOWED, ELECTRICAL NOISE COULD CAUSE MALFUNCTIONS OR DAMAGE TO THE UNIT AND ITS CONTROLS.
I.	●→ 120/14.3 - (SIGNAL IN/OUT) I.E. 120 IS WIRE # AND 14.3 REFERS TO SHT. 14 COLUMN 3

NOTES	
1	REFER TO INSTALLATION COMMISIONING OPERATION AND MAINTENANCE MANUAL FOR CUSTOMER CONNECTIONS AND CUSTOMER CONNECTION NOTES, NON COMPLIANCE TO THESE INSTRUCTIONS WILL INVALIDATE UNIT WARRANTY.
2	WIRING AND COMPONENTS FOR COMPRESSOR 3 ONLY FITTED WHEN UNIT HAS 3 COMPRESSORS ON THE SYSTEM. 1-BMP3 IS REPLACED BY A LINK ACROSS TERMINALS 134 & 135. 2-BMP3 IS REPLACED BY A LINK ACROSS TERMINALS 234 & 235.
3	FHP2 IS ONLY FITTED ON CE YLAA0180 AND ABOVE. WHEN NOT FITTED 1-FHP2 IS REPLACED BY A LINK ACROSS TERMINALS 132 & 139. 2-FHP2 IS REPLACED BY A LINK ACROSS TERMINALS 232 & 239
4	FITTED ON UNITS WITH HOT GAS BYPASS OPTION.
5	EMS OPTION IS WIRED AS SHOWN
6	THIS WIRING MUST BE USED FOR OLD DISPLAY 031-0110-000
7	NETWORK CONNECTION POINT
8	PRINTER PORT
9	REMOTE EMERGENCY STOP CAN BE WIRED BETWEEN TERMINAL L AND 5 AFTER REMOVING LINK
10	POWER FACTOR CORRECTION ACCESSORY. POWER FACTOR CORRECTION FITTED TO EACH COMPRESSOR CONTACTOR
11	NOT FITTED ON COMPRESSORS WITH INTERNAL MOTOR PROTECTION. FOR SYSTEM 1 TERMINALS 132 & 133, 133 & 134 AND 134 & 135 ARE LINKED. FOR SYSTEM 2 TERMINALS 232 & 233, 233 & 234 AND 234 & 235 ARE LINKED.
12	ONLY FITTED ON SYSTEMS WITH 3 OR 4 FANS
13	ONLY FITTED ON SYSTEMS WITH 4 FANS
14	ONLY FITTED ON SYSTEMS WITH 5 FANS
15	ONLY FITTED ON SYSTEMS WITH 6 FANS
16	INPUT SWITCH DISCONNECT (STANDARD ON CE UNITS) OR CIRCUIT BREAKER OPTION REPLACES INPUT TERMINAL BLOCK
17	INPUT SWITCH DISCONNECT & INDIVIDUAL SYSTEM CIRCUIT BREAKER OPTION REPLACES INPUT TERMINAL BLOCK
18	115V CONTROL CIRCUIT REQUIRES A 115V SUPPLY UNLESS CONTROL CIRCUIT TRANSFORMER -T2 & -F3 ARE FITTED (STANDARD ON CE UNITS)
19	FOR OPTIONAL HYDRO KIT. HEATER -EPH IS FITTED AND WIRED AS SHOWN. ON SINGLE PUMP -KP1, -QMMSP1 & -MP1 ARE FITTED & WIRED AS SHOWN. ON TWO PUMP HYDRO KITS -KP2, -QMMSP2 & -MP2 ARE ALSO FITTED AND WIRED AS SHOWN.
20	CURRENT MEASUREMENT OPTION WIRED AS SHOW
21	ONLY FITTED ON SYSTEMS WITH SINGLE SPEED FANS
22	ONLY FITTED ON SYSTEMS WITH TWO SPEED FANS
23	OPTIONAL COMPRESSOR MANUAL MOTORS STARTERS (STANDARD ON CE UNITS)
24	SEE SHEET 3 OF CONNECTION DIAGRAM FOR POWER INPUT OPTIONS
25	ALTERNATE CONNECTIONS SHOWN FOR DIFFERENT TWO SPEED MOTOR TYPES
26	ONLY FITTED ON SYSTEMS WITH A MAXIMUM OF 4 FANS
27	220/230V UNITS REQUIRE A SEPARATE FUSE FOR UNITS W/4 OR MORE FANS PER SYSTEM
28	LOW AMBIENT KIT -FSC FOR FAN -MF1 IS ONLY FITTED ON SYSTEMS WITH LESS THAN 4 FANS
29	ONLY FITTED ON YLAA0091
30	ONLY FITTED ON YLAA0090,0091, 0135
31	INPUT DUAL POINT CIRCUIT BREAKER OPTION REPLACES INPUT TERMINAL BLOCK
32	FIELD INSTALLED ON REMOTE EVAPORATOR UNITS
33	FITTED ON UNITS WITH SINGLE PHASE MOTORS ONLY
34	FITTED ON UNITS WITH LOW AMBIENT OPTION ONLY
35	ONLY FITTED ON UNITS WITH AN ACOUSTIC KIT
36	ONLY FITTED ON HEAT RECOVERY UNITS
37	ONLY FITTED ON CONDENSING UNITS
38	OMITTED ON CONDENSING UNITS

Application Data

UNIT LOCATION

The YLUA Condensing Units are designed for outdoor installation. When selecting a site for installation, be guided by the following conditions:

1. For outdoor locations of the unit, select a place having an adequate supply of fresh air for the condenser.

2. Avoid locations beneath windows or between structures where normal operating sounds may be objectionable.

3. Installation sites may be either on a roof, or at ground level. (See **FOUNDATION**, below.)

4. The condenser fans are the propeller-type, and are not recommended for use with duct work in the condenser air stream.

5. When it is desirable to surround the unit(s), it is recommended that the screening be able to pass the required chiller CFM without exceeding 0.1" of water external static pressure.

6. Protection against corrosive environments is available by supplying the units with either copper fin, cured phenolic, or epoxy coating on the condenser coils. The phenolic or epoxy coils should be offered with any units being installed at the seashore or where salt spray may hit the unit.

In installations where winter operation is intended and snow accumulations are expected, additional height must be provided to ensure normal condenser air flow.

Recommended clearances for units are given in **DIMENSION DRAWINGS**. When the available space is less, the unit(s) must be equipped with the discharge pressure transducer option to permit high pressure unloading in the event that air recirculation were to occur.

FOUNDATION

The unit should be mounted on a flat and level foundation, ground or roof, capable of supporting the entire operating weight of the equipment. Operating weights are given in the **PHYSICAL DATA** tables.

Roof Locations – Choose a spot with adequate structural strength to safely support the entire weight of the unit and service personnel. Care must be taken not to damage the roof during installation. If the roof is "bonded", consult the building contractor or architect for special installation requirements. Roof installations should incorporate the use of spring-type isolators to minimize the transmission of vibration into the building structure.

Ground Level Installations – It is important that the units be installed on a substantial base that will not settle, causing strain on the refrigerant lines and resulting in possible leaks. A one-piece concrete slab with footers extending below the frost line is highly recommended, particularly in areas where winters are long and very cold. Additionally, the slab should not be tied to the main building foundation as noises will telegraph.

Mounting holes (11/16" diameter) are provided in the steel channel for bolting the unit to its foundation. See **DIMENSION DRAWINGS**.

For ground level installations, precautions should be taken to protect the unit from tampering by or injury to unauthorized persons. Screws on access panels will prevent casual tampering; however, further safety precautions, such as unit enclosure options, a fenced-in enclosure, or locking devices on the panels may be advisable. Check local authorities for safety regulations.

REFRIGERANT PIPING

When sizing refrigerant pipe for split system air conditioning, consideration must be given to the: (1) Suction line pressure drop due to friction, (2) Liquid line pressure drop due to friction, (3) Suction line velocity for oil return, and (4) Liquid line pressure drop due to vertical rise. Refer to **DESIGN PARAMETERS** for friction losses for both the suction and liquid lines for the condensing unit.

On a system where the evaporator blower is located below the condensing unit, the suction line must be sized for both pressure drop and oil return.

When the condensing unit is located below the evaporator blower, the liquid line must be designed for pressure drop due to friction loss and vertical rise. If the pressure drop due to vertical rise and friction loss exceeds 30 psig (2.1 barg), some refrigerant will flash before it reaches the thermal expansion valve.

All horizontal suction lines should be pitched at least 1/4 inch (6 mm) per foot in the direction of the refrigerant flow to aid the return of oil to the compressor. All suction lines with a vertical rise exceeding 3 feet (1 m) should have a 'P' trap at the bottom and the top to facilitate oil return. Suction lines with a vertical rise exceeding 25 feet (7.6 m) should be trapped every 15 feet (4.6 m) to provide drain points for the oil when the circuit is deactivated. When the circuit is reactivated, oil will return to the compressor more quickly and in smaller slugs.

For more details, refer to ASHRAE Refrigeration Handbook, System Practices for Halocarbon Refrigerants.

PART 1 – GENERAL

1.01 SCOPE

A. The requirements of the General Conditions, Supplementary Conditions, Division 1, and Drawings apply to all Work herein.

B. Provide Microprocessor controlled, multiple-scroll compressor, air-cooled, condensing units of the scheduled capacities as shown and indicated on the Drawings, including but not limited to:

1. Condensing Unit package
2. Electrical power and control connections
3. DX Central Station Air Handling connections

1.02 QUALITY ASSURANCE

A. Products shall be Designed, Tested, and installed in compliance with applicable sections of the following Standards and Codes:

1. ANSI/ASHRAE Standard 15 – *Safety Code for Mechanical Refrigeration*
2. ASHRAE 90.1 - *Energy efficiency compliance.*
3. ANSI/NFPA Standard 70 – *National Electrical Code (N.E.C.).*
4. Conform to Intertek Testing Services, formerly ETL, for construction of condensing units and provide E.T.L./c E.T.L. Listing label.
5. Manufactured in facility registered to ISO 9002.

B. Factory Test: Condensing Unit shall be pressure tested, evacuated and given a nitrogen holding charge and an initial oil charge, and shall be factory operational run tested to assure each control device operates properly.

C. Warranty: Manufacturer shall Warrant all equipment and material of its manufacture against defects in workmanship and material for a period of one year from date of initial start-up or eighteen (18) months from date of shipment, whichever occurs first.

1.03 DELIVERY AND HANDLING

A. Unit shall be delivered to job site fully assembled, and given nitrogen holding charge and a full oil charge by the Manufacturer. (R-410A refrigerant supplied by others).

B. Unit shall be stored and handled per Manufacturer's instructions.

PART 2 - PRODUCTS

2.01 CONDENSING UNITS MATERIALS AND COMPONENTS

A. General: Install and commission, as shown on the schedules and plans, factory assembled, charged, and tested air cooled scroll compressor condensing unit as specified herein. Condensing Unit shall be designed, selected, and constructed using a refrigerant with Flammability rating of "1", as defined by ANSI/ASHRAE STANDARD - 34 *Number Designation and Safety Classification of Refrigerants*. Condensing Unit shall include, but is not limited to: not less than two refrigerant circuits, scroll compressors, air-cooled condenser, refrigerant, lubrication system, interconnecting wiring, safety and operating controls including capacity controller, control center, motor starting components, and special features as specified herein or required for safe, automatic operation.

B. Cabinet: External structural members shall be constructed of heavy gauge, galvanized steel coated with baked on powder paint which, when subject to ASTM B117, 1000 hour, 5% salt spray test, yields minimum ASTM 1654 rating of "6".

2.02 COMPRESSORS

Compressors: Shall be hermetic, scroll-type, including:

1. Compliant design for axial and radial sealing.
2. Refrigerant flow through the compressor with 100% suction cooled motor.
3. Large suction side free volume and oil sump to provide liquid handling capability.
4. Compressor crankcase heaters to provide extra liquid migration protection.
5. Annular discharge check valve and reverse vent assembly to provide low pressure drop, silent shutdown and reverse rotation protection.
6. Initial Oil charge.
7. Oil Level sightglass.
8. Vibration isolator mounts for compressors.
9. Brazed-type connections for fully hermetic refrigerant circuits.

2.03 REFRIGERANT CIRCUIT

Two independent refrigerant circuits will be furnished on each unit. All unit piping will be copper, with brazed joints. The liquid line will include a field connection shutoff valve with charging port located on each condenser circuit. Suction line connections are provided on each refrigeration circuit. Filter drier and sight glass are shipped loose for field installation on each refrigerant circuit. All expansion

valves and liquid line solenoid valves and refrigerant field piping are supplied by others.

2.04 HEAT EXCHANGERS

A. Air Cooled Condenser:
   1. Coils: Internally enhanced, seamless copper tubes, mechanically expanded into aluminum alloy fins with full height collars. Subcooling coil an integral part of condenser. Design working pressure shall be 650 psig (45 barg).
   2. Fans: Shall be dynamically and statically balanced, direct drive, corrosion resistant glass fiber reinforced composite blades molded into low noise, full airfoil cross section, providing vertical air discharge from extended orifices for efficiency and low sound. Each fan in its own compartment to prevent cross flow during fan cycling. Guards of heavy gauge PVC (polyvinyl chloride) coated steel.
   3. Fan Motors: High efficiency, direct drive, 6 pole, 3 phase, insulation class “F”, current-protected, Totally Enclosed Air-Over (TEAO), rigid mounted, with double sealed, permanently lubricated, ball bearings.

2.05 CONTROLS

A. General: Automatic start, stop, operating, and protection sequences across the range of scheduled conditions and transients.

B. Microprocessor Enclosure: Raintight NEMA 3R powder painted steel cabinet with hinged, latched, and gasketed door.

C. Microprocessor Control Center:
   1. Condensing Unit control is set for Discharge Air Temperature Control
   2. Automatic control of compressor start/stop, anti-coincidence and anti-recycle timers, automatic pump-down shut-down, condenser fans, unit alarm contacts, and condensing unit operation from 0°F to 125°F (-18°C to 52°C) ambient. Automatic reset to normal chiller operation after power failure.
   3. Software stored in non-volatile memory, with programmed set-points retained in lithium battery-backed real time clock (RTC) memory for minimum 5 years.
   4. Forty character liquid crystal display, descriptions in English (or Spanish, French, Italian, or German), numeric data in English (or Metric) units. Sealed keypad with sections for Setpoints, Display/Print, Entry, Unit Options & clock, and On/Off Switch.
   5. Programmable Set-points (within Manufacturer limits): display language; suction pressure setting and control range, remote reset temperature range, set daily schedule/holiday for start/stop, manual override for servicing, low and high ambient cutouts, number of compressors, low suction pressure cutout, high discharge pressure cutout, anti-recycle timer (compressor start cycle time), and anticoincident timer (delay compressor starts).
   6. Display Data: Suction temperatures (optional), low ambient temperature cutout setting, outdoor air temperature, English or metric data, suction pressure cutout setting, each system suction pressure, discharge pressure (optional), discharge air reset via Building Automation System (by others) via a 4-20milliamp or 0-10 VDC input with optional BAS interface, anti-recycle timer status for each system, anti-coincident system start timer condition, compressor run status, no cooling load condition, day, date and time, daily start/stop times, holiday status, automatic or manual system lead/lag control (when controlling based on Discharge Air Temperature only), automatic lead/lag of compressors within a system, compressor starts/operating hours (each), status of hot gas valves, and fan operation, run permissive status, number of compressors running, liquid solenoid valve status, load & unload timer status.
   7. System Safeties: Shall cause individual compressor systems to perform auto shut down; manual reset required after the third trip in 90 minutes. Includes: high discharge pressure, low suction pressure, high pressure switch, and motor protector. Compressor motor protector shall protect against damage due to high input current or thermal overload of windings.
   8. Unit Safeties: Shall be automatic reset and cause compressors to shut down if low ambient, or under voltage.
   9. Alarm Contacts: Low ambient, low voltage, low battery, and (per compressor circuit): high discharge pressure, and low suction pressure.
   10. High Ambient Control: Permits unit operation above 115°F (46°C) ambient.

D. Manufacturer shall provide any controls not listed above, necessary for automatic condensing unit operation. Mechanical Contractor shall provide field control wiring necessary to interface sensors to the condensing unit control system.

2.06 POWER CONNECTION AND DISTRIBUTION

A. Power Panels:
   1. NEMA 3R raintight, powder painted steel cabinets with hinged, latched, and gasketed outer doors. Provide main power connection(s), control power connections, compressor and fan motor start contactors, current overloads, and factory wiring.
   2. Power supply shall enter unit at a single location, be 3 phase of scheduled voltage, and connect to individual terminal blocks per compressor. Separate disconnecting means and/or external branch circuit protection (by Contractor) required per applicable local or national codes.

B. Exposed compressor, control and fan motor power wiring shall be routed through liquid tight conduit.

2.07 ACCESSORIES AND OPTIONS

Some accessories and options supercede standard product features. Your YORK representative will be pleased to provide assistance.

A. Microprocessor controlled, Factory installed Across-the-Line type compressor motor starters as standard.

B. Outdoor Ambient Temperature Control
   1. Low Ambient Control: Permits unit operation to 0°F (-18°C) ambient. Standard unit controls to 32°F (0°C) ambient.

C. Power Supply Connections:
   1. Single Point Power Supply: Single point Terminal Block for field connection and interconnecting wiring to the compressors. Separate external protection must be supplied, by others, in the incoming power wiring, which must comply with the National Electric Code and/or local codes.
   2. Single Point: Single point Non-Fused Disconnect(s) and lockable external handle (in compliance with Article 440-14 of N.E.C.) can be supplied to isolate the unit power voltage for servicing. Separate external fusing must be supplied, by others, in the in coming power wiring, which must comply with the National Electric Code and/or local codes.
   3. Single Point Disconnect with Individual System Breakers: Single point Terminal Block with Non-Fused Disconnect and lockable external handle (in compliance with Article 440-14 of N.E.C.) can be supplied to isolate power voltage for servicing. Factory interconnecting wiring from disconnect to factory supplied circuit breakers.
   4. Single Point Circuit Breaker: Single point Terminal Block with Circuit Breaker and lockable external handle (in compliance with Article 44014 of N.E.C.) can be supplied to isolate power voltage for servicing. Incoming power wiring must comply with the National Electric Code and/or local codes.

D. Pressure & Temperature Transducers and Sensors
   1. Discharge Pressure Transducers: Permits unit to sense and display discharge pressure.
   2. Suction Pressure Transducers: Permits unit to sense and display suction pressure.
   3. Suction Temperature Sensors: Permits units to sense and display suction temperature.

E. Control Power Transformer: Converts unit power voltage to 120-1-60 (500 VA capacity). Factory mounting includes primary- and secondary-wiring between the transformer and the control panel.

F. Motor Current Module: Capable of monitoring compressor motor current. Provides extra protection against compressor reverse rotation, phase-loss and phase imbalance. Options consists of one module per electrical system. (Factory mounted)

G. Power Factor Correction Capacitors: Provided to correct unit compressor factors to a 0.900.95.

H. Condenser Coil Environmental Protection:
   1. Pre-Coated: Epoxy coated aluminum fin stock to guard from corrosive agents and insulate against galvanic potential. For mild seashore or industrial locations
   2. Copper Fin: Provide copper fins in lieu of aluminum.
   3. Post-Coated Dipped: Dipped-cured coating on condenser coils for seashore and other corrosive applications (with the exception of strong alkalis, oxidizers, and wet bromine, chlorine and fluorine in concentrations greater than 100ppm).

I. Protective Condensing Unit Panels (Factory or Field Mounted):
   1. Louvered Panels (condenser coils only): Painted steel as per remainder of unit cabinet, over external condenser coil faces.
   2. Wire Panels (full unit): Heavy gauge, welded wire-mesh, coated to resist corrosion, to protect condenser coils from incidental damage and restrict unauthorized access to internal components.
   3. Louvered Panels (full unit): Painted steel as per remainder of unit cabinet, to protect condenser

coils from incidental damage,visually screen internal components, and prevent unauthorized access to internal components.

4. Louvered/Wire Panels: Louvered steel panels on external condenser coil faces, painted as per remainder of unit cabinet. Heavy gauge, welded wire-mesh, coated to resist corrosion, around base of machine to restrict unauthorized access.

J. Service Isolation valves: Service suction and discharge (ball type) isolation valves are added to unit per system. This option also includes a system high pressure relief valve in compliance with ASHRAE15. (Factory-mounted.)

K. Hot Gas By-Pass: Permits continuous, stable operation at capacities below the minimum step of unloading to as low as 5% capacity (depending on both the unit & operating conditions) by introducing an artificial load. Hot gas by-pass is installed on only refrigerant system #1 on two circuited units. (Factory-mounted.)

L. Microprocessor Membrane Keypad Graphics on in lieu of Standard English:

1. French language.
2. German language.
3. Spanish language.
4. Italian language.

M. Chicago Code Relief Valves to meet Chicago Code requirements.

N. Building Automation System (EMS) Reset Interface: Condensing Unit to accept 4 to 20mA, 0 to 10 VDC, input to reset the discharge air temperature.

O. Sound Reduction (Factory Mounted):

1. Low speed, reduced noise fans
2. Compressor Acoustic Sound Blankets

P. Vibration Isolation (Field Mounted):

1. Neoprene Pad Isolators.
2. 1 Inch Deflection Spring Isolators: Level adjustable, spring and cage type isolators for mounting under the unit base rails.
3. 2 Inch Deflection Isolators: Level adjustable, restrained mounts in rugged welded steel housing with vertical and horizontal limit stops. Housings shall be designed to withstand a minimum 1.0g accelerated force in all directions to 2 inches.

PART 3 - EXECUTION

3.01 INSTALLATION

A. General: Rig and Install in full accordance with Manufacturers requirements, Project drawings, and Contract documents.

B. Location: Locate condensing unit as indicated on drawings, including cleaning and service maintenance clearance per Manufacturer instructions. Adjust and level condensing unit on support structure.

C. Components: Installing Contractor shall provide and install all auxiliary devices and accessories for fully operational condensing unit.

D. Electrical: Coordinate electrical requirements and connections for all power feeds with Electrical Contractor (Division 16).

E. Controls: Coordinate all control requirements and connections with Controls Contractor.

F. Finish: Installing Contractor shall paint damaged and abraded factory finish with touch-up paint matching factory finish.

Printed on recycled paper
Form 150.63-EG4 (1012) Supersedes: 150.63-EG4 (1009)
© 2012 Johnson Controls, Inc.
www.johnsoncontrols.com

Johnson Controls