INSTALLATION MANUAL

R-410A
ZX SERIES
7.5 - 12.5 Ton
60 Hertz

TABLE OF CONTENTS

General . . . 2
Installation . . . 5
Preceding Installation . . . 5
Limitations . . . 6
Location . . . 6
Rigging And Handling . . . 7
ZX08-14 Unit Weights . . . 8
Ductwork . . . 14
Condensate Drain . . . 15
Compressors . . . 15
Filters . . . 15
Power And Control Wiring . . . 16
Typical Field Power and Control Wiring . . . 17
Typical Power Wiring . . . 17
Optional Gas Heat . . . 38
Options/Accessories . . . 40
Blower Phasing . . . 40
Airflow Performance . . . 44
Operation . . . 56
Compressor Operation . . . 56
IntelliSpeed Supply Fan Control . . . 56
Economizer Sequences . . . 56
Dry Bulb Changeover . . . 56
Single Enthalpy Changeover . . . 56
Dual Enthalpy Changeover . . . 56
Auto . . . 57
Free Cooling Operation . . . 57
Power Exhaust . . . 57
Setpoints . . . 57
Inputs . . . 57
Outputs . . . 57
Operation . . . 57
Gas Heating Operation . . . 61
Gas Heat Ignition Control Board Function . . . 62
Start-Up (Cooling) . . . 63
Start-Up (Gas Heat) . . . 64
Checking Gas Heat Input . . . 64
Troubleshooting . . . 67
Control Board Navigation Components . . . 74
Smart Equipment™ Firmware Version 3.3 Basic Unit Control Board Navigation Examples: . . . 75
Start-Up Sheet . . . 77

LIST OF TABLES

1 ZX08-14 Unit Limitations . . . 6
2 ZX08-14 Corner Weights . . . 8
3 ZX08-14 Unit Accessory Weights . . . 9
4 ZX08-14 Unit Clearances . . . 13
5 Unit Models used with 1RC0457, 1RC0459 Roof Curb . . . 13
6 Control Wire Sizes . . . 16
7 Electrical Data . . . 18
8 Physical Data . . . 30
9 Gas Pipe Sizing - Capacity of Pipe . . . 38
10 Gas Heat Supply Air . . . 39
11 Supply Air Limitations . . . 41
12 Altitude/Temperature Correction Factors . . . 43
13 ZX08-14 Side Duct Application (Belt Drive) . . . 45
14 ZX08-14 Bottom Duct Application (Belt Drive) . . . 47
15 RPM Selection . . . 48
16 Indoor Blower Specifications . . . 48
17 Motor Sheave Datum Diameters . . . 49
18 Additional Static Resistance - ZX08-14 . . . 49
19 Smart Equipment™ UCB Details . . . 50
20 Cable for FC Buses and SA Buses in Order of Preference 55
21 Smart Equipment™ Economizer Board Details . . . 58
22 Gas Rate Cubic Feet Per Hour . . . 65
23 Gas Heat Stages . . . 65
24 Flash Codes for the Gas Heat Ignition Control Board . . . 67
25 ZX08 Charging Table System 1 . . . 70
26 ZX08 Charging Table System 2 . . . 70
27 ZX09 Charging Table System 1 . . . 71
28 ZX09 Charging Table System 2 . . . 71
29 ZX12 Charging Table System 1 . . . 72
30 ZX12 Charging Table System 2 . . . 72
31 ZX14 Charging Table System 1 . . . 73
32 ZX14 Charging Table System 2 . . . 73

LIST OF FIGURES

1 Unit Shipping Bracket . . . 5
2 Condenser Covering . . . 5
3 Return Air Smoke Detector Field Location . . . 5
4 Unit 4 Point Load Weight . . . 8
5 Unit 6 Point Load Weight . . . 8
6 Center of Gravity . . . 8
7 ZX08 Unit Dimensions . . . 10
8 ZX09/12 Unit Dimensions . . . 11
9 ZX14 Unit Dimensions . . . 12
10 1RC0457, 1RC0459 Roof Curb Dimensions . . . 13
11 Side Duct Cover Panels . . . 14
12 Bottom Return Opening For Side Duct Conversion . . . 14
13 Bottom Supply Opening For Side Duct Conversion . . . 15
14 Condensate Drain . . . 15
15 Typical Smart Equipment™ Control Wiring . . . 17
16 Side Entry Gas Piping . . . 38
17 Flue Exhaust Hood Shipping Location . . . 40
18 Flue Exhaust Hood Installed . . . 40
19 Belt Adjustment . . . 41
20 Altitude/Temperature Correction Factors . . . 43
21 Unit Control Board . . . 50
22 SE-ECO1001-1 Economizer Controller . . . 58
23 Ignition Control Board . . . 61
24 Typical Flame . . . 66
25 7.5 Thru 12.5 Ton 3/4” Two Stage Gas Valve . . . 66

General

ZX units are single package air conditioners with optional gas heating designed for outdoor installation on a rooftop or slab and for non-residential use.

These units are completely assembled on rigid, permanently attached base rails. All piping, refrigerant charge, and electrical wiring is factory installed and tested. The units require electric power, gas supply (where applicable), and duct connections.

Safety Considerations

⚠ This is a safety alert symbol. When you see this symbol on labels or in manuals, be alert to the potential for personal injury.

Understand and pay particular attention the signal words **DANGER**, **WARNING** or **CAUTION**.

DANGER indicates an **imminently** hazardous situation, which, if not avoided, **will result in death or serious injury.**

WARNING indicates a **potentially** hazardous situation, which, if not avoided, **could result in death or serious injury.**

CAUTION indicates a potentially hazardous situation, which, if not avoided **may result in minor or moderate injury.** It is also used to alert against unsafe practices and hazards involving only property damage.

⚠WARNING

Improper installation may create a condition where the operation of the product could cause personal injury or property damage. Improper installation, adjustment, alteration, service or maintenance can cause injury or property damage. Refer to this manual for assistance or for additional information, consult a qualified contractor, installer or service agency.

⚠ CAUTION

This product must be installed in strict compliance with the installation instructions and any applicable local, state and national codes including, but not limited to building, electrical, and mechanical codes.

⚠WARNING

Before performing service or maintenance operations on unit, turn off main power switch to unit. Electrical shock could cause personal injury. Improper installation, adjustment, alteration, service or maintenance can cause injury or property damage. Refer to this manual. For assistance or additional information consult a qualified installer, service agency or the gas supplier.

⚠ CAUTION

This system uses R-410A Refrigerant which operates at higher pressures than R-22. No other refrigerant may be used in this system. Gauge sets, hoses, refrigerant containers and recovery systems must be designed to handle R-410A. If you are unsure, consult the equipment manufacturer. Failure to use R-410A compatible servicing equipment may result in property damage or injury.

⚠WARNING

If the information in this manual is not followed exactly, a fire or explosion may result causing property damage, personal injury or loss of life.

Do not store or use gasoline or other flammable vapors and liquids in the vicinity of this or any other appliance.

WHAT TO DO IF YOU SMELL GAS:

a. Do not try to light any appliance.
b. Do not touch any electrical switch; do not use any phone in your building.
c. Immediately call your gas supplier from a neighbor's phone. Follow the gas supplier's instructions.
d. If you cannot reach your gas supplier, call the fire department.

Installation and service must be performed by a qualified installer, service agency or the gas supplier.

⚠WARNING

ELECTRICAL SHOCK, FIRE OR EXPLOSION HAZARD

Failure to follow safety warnings exactly could result in dangerous operation, serious injury, death or property damage.

Improper servicing could result in dangerous operation, serious injury, death or property damage.

- Before servicing, disconnect all electrical power to furnace.
- When servicing controls, label all wires prior to disconnecting. Reconnect wires correctly.
- Verify proper operation after servicing.

Due to system pressure, moving parts, and electrical components, installation and servicing of air conditioning equipment can be hazardous. Only qualified, trained service personnel should install, repair, or service this equipment. Untrained personnel can perform basic maintenance functions of cleaning coils and filters and replacing filters.

Observe all precautions in the literature, labels, and tags accompanying the equipment whenever working on air

conditioning equipment. The installation must conform with local building codes or, in the absence of local codes, with the National Fuel Gas Code, ANSI Z223.1/NFPA 54, and/or the National Gas and Propane Installation Code, CSA B149.1.

Wear safety glasses and work gloves. Use quenching cloth and have a fire extinguisher available during brazing operations.

Inspection

As soon as a unit is received, it should be inspected for possible damage during transit. If damage is evident, the extent of the damage should be noted on the carrier's freight bill. A separate request for inspection by the carrier's agent should be made in writing.

⚠ CAUTION

This product must be installed in strict compliance with the enclosed installation instructions and any applicable local, state and national codes including, but not limited to, building, electrical, and mechanical codes.

The furnace and its individual shut-off valve must be disconnected from the gas supply piping system during any pressure testing at pressures in excess of 1/2 PSIG.

Pressures greater than 1/2 PSIG will cause gas valve damage resulting in a hazardous condition. If it is subjected to a pressure greater than 1/2 PSIG, the gas valve must be replaced.

The furnace must be isolated from the gas supply piping system by closing its individual manual shut-off valve during any pressure testing of the gas supply piping system at test pressures equal to or less than 1/2 PSIG

Reference

Additional information is available in the following reference forms:

- Technical Guide - ZX/ZY04-14 1068152
- General Installation - ZX08-14 1193253
- Economizer Accessory -
  Vertical Flow Dry Bulb Economizer Field Installed
  Horizontal Flow Dry Bulb Economizer Field Installed
- Power Exhaust -
  Vertical Flow Dry Bulb Economizer Field Installed
  Horizontal Flow Dry Bulb Economizer Field Installed

Renewal Parts

Contact your local UP parts distribution center for authorized replacement parts.

Approvals

Design certified by CSA as follows:

1. For use as a cooling only unit, cooling unit with a forced air furnace.
2. For outdoor installation only.
3. For installation on combustible material and may be installed directly on combustible flooring or, in the U.S., on wood flooring or Class A, Class B or Class C roof covering materials.
4. For use with natural gas.

⚠ CAUTION

This product must be installed in strict compliance with the enclosed installation instructions and any applicable local, state, and national codes including, but not limited to, building, electrical, and mechanical codes.

⚠WARNING

Improper installation may create a condition where the operation of the product could cause personal injury or property damage.

⚠ CAUTION

This system uses R-410A Refrigerant which operates at higher pressures than R-22. No other refrigerant may be used in this system.

Nomenclature

7.5-12.5 Ton Model Number Nomenclature

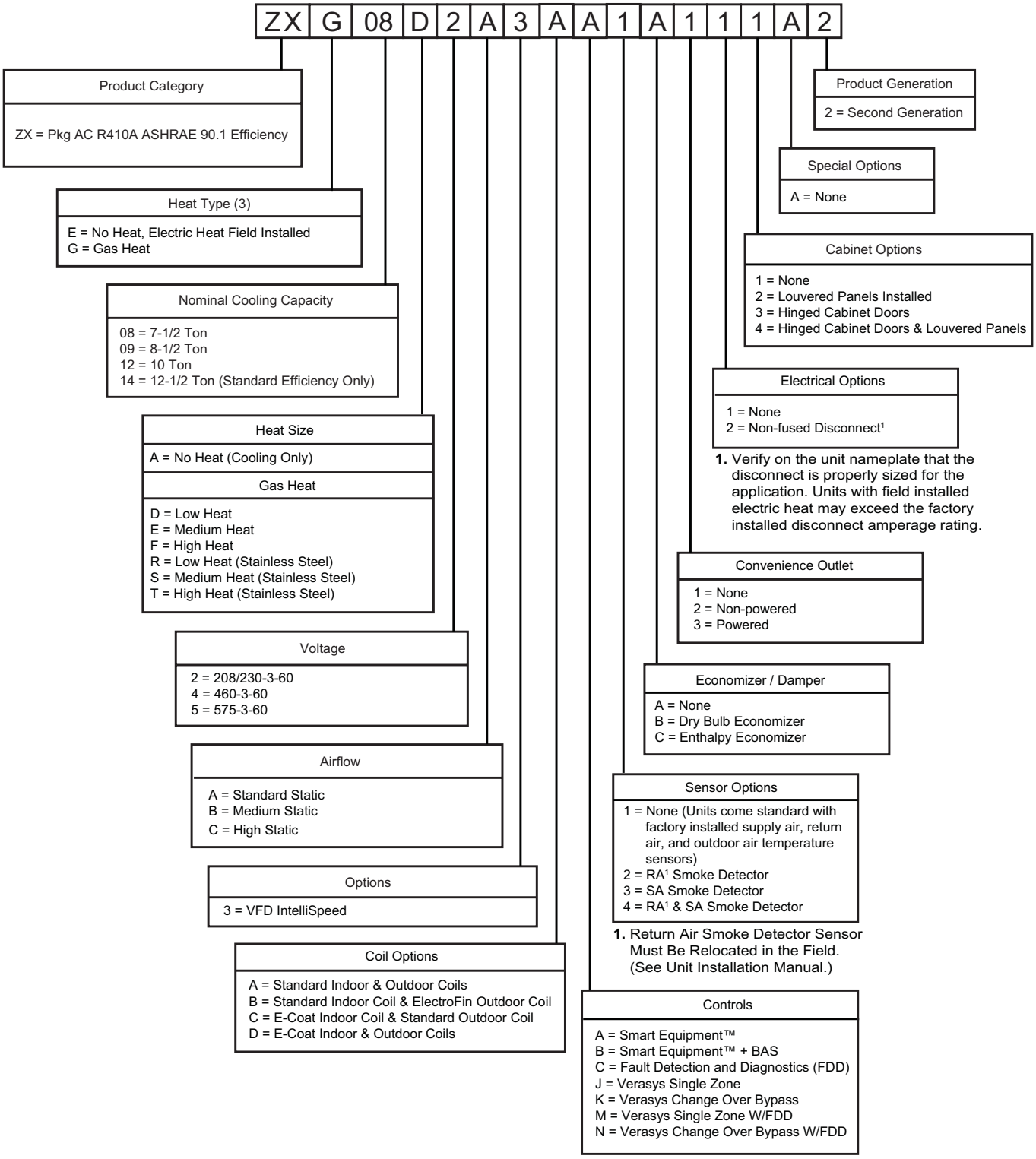

Installation

Installation Safety Information

Read these instructions before continuing this appliance installation. This is an outdoor combination heating and cooling unit. The installer must assure that these instructions are made available to the consumer and with instructions to retain them for future reference.

1. Refer to the unit rating plate for the approved type of gas for this product.
2. Install this unit only in a location and position as specified on Page 6 of these instructions.
3. Never test for gas leaks with an open flame. Use commercially available soap solution made specifically for the detection of leaks when checking all connections, as specified on Pages 5, 39, 40 and 64 of these instructions.
4. Always install furnace to operate within the furnace's intended temperature-rise range with the duct system and within the allowable external static pressure range, as specified on the unit name/rating plate, specified in Table 8 of these instructions.
5. This equipment is not to be used for temporary heating of buildings or structures under construction.

⚠WARNING

FIRE OR EXPLOSION HAZARD

Failure to follow the safety warning exactly could result in serious injury, death or property damage.

Never test for gas leaks with an open flame. Use a commercially available soap solution made specifically for the detection of leaks to check all connections. A fire or explosion may result causing property damage, personal injury or loss of life.

Preceding Installation

1. Remove the two screws holding the brackets in the side fork-lift slots.

Figure 1: Unit Shipping Bracket

2. Turn each bracket toward the ground and the protective plywood covering will drop to the ground.
3. Remove the condenser coil external protective covering prior to operation.

Figure 2: Condenser Covering

4. If a factory option convenience outlet is installed, the weatherproof outlet cover must be field installed. The cover shall be located behind the filter access panel. To install the cover, remove the shipping label covering the convenience outlet, follow the instructions on the back of the weatherproof cover box, and attach the cover to the unit using the (4) screws provided.

⚠CAUTION

208/230-3-60 and units with factory installed Powered Convenience Outlet Option are wired for 230v power supply. Change tap on transformer for 208-3-60 operation. See unit wiring diagram.

5. If a factory option return air smoke detector is installed, the return air sensor must be moved from a factory shipped (upside down) position to the (right side up) working position and the flex conduit sampler tube connected.

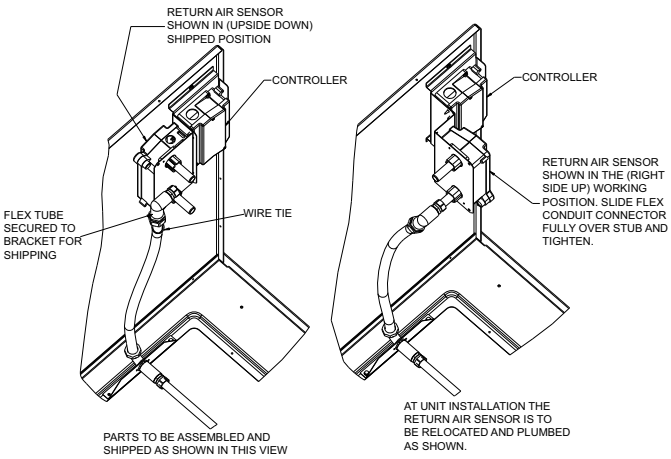

Figure 3: Return Air Smoke Detector Field Location

Limitations

These units must be installed in accordance with the following:

In U.S.A.:

1. National Electrical Code, ANSI/NFPA No. 70 - Latest Edition
2. National Fuel Gas Code, ANSI Z223.1 - Latest Edition
3. Gas-Fired Central Furnace Standard, ANSI Z21.47a. - Latest Edition
4. Local building codes, and
5. Local gas utility requirements

In Canada:

1. Canadian Electrical Code, CSA C22.1
2. Installation Codes, CSA - B149.1.
3. Local plumbing and waste water codes, and
4. Other applicable local codes.

Refer to unit application data found in this document.

After installation, gas fired units must be adjusted to obtain a temperature rise within the range specified on the unit rating plate.

If components are to be added to a unit to meet local codes, they are to be installed at the dealer's and/or customer's expense.

Size of unit for proposed installation should be based on heat loss/heat gain calculation made according to the methods of Air Conditioning Contractors of America (ACCA).

This furnace is not to be used for temporary heating of buildings or structures under construction.

Table 1: ZX08-14 Unit Limitations

Model	Size (Tons)	Unit Voltage	Unit Limitations		
			Applied Voltage		Outdoor DB Temp
			Min	Max	Max (°F)
ZX	08 (7.5)	208/230-3-60	187	252	125
		460-3-60	432	504	125
		575-3-60	540	630	125
ZX	09 (8.5)	208/230-3-60	187	252	125
		460-3-60	432	504	125
		575-3-60	540	630	125
ZX	12 (10)	208/230-3-60	187	252	125
		460-3-60	432	504	125
		575-3-60	540	630	125
ZX	14 (12.5)	208/230-3-60	187	252	125
		460-3-60	432	504	125
		575-3-60	540	630	125

Location

Use the following guidelines to select a suitable location for these units:

1. Unit is designed for *outdoor installation only*.
2. Condenser coils must have an unlimited supply of air. Where a choice of location is possible, position the unit on either north or east side of building.
3. Suitable for mounting on roof curb.
4. For ground level installation, use a level concrete slab with a minimum thickness of 4 inches. The length and width should be at least 6 inches greater than the unit base rails. Do not tie slab to the building foundation.
5. Roof structures must be able to support the weight of the unit and its options/accessories. Unit must be installed on a solid, level roof curb or appropriate angle iron frame.
6. Maintain level tolerance to 1/2" across the entire width and length of unit.

⚠WARNING

Excessive exposure of this furnace to contaminated combustion air will result in safety and performance related problems. Typical contaminates include: permanent wave solution, chlorinated waxes and cleaners, chlorine based swimming pool chemicals, water softening chemicals, de-icing salts or chemicals, carbon tetrachloride, Halogen type refrigerants, cleaning solvents (e.g. perchloroethylene), printing inks, paint removers, varnishes, hydrochloric acid, cements and glues, anti-static fabric softeners for clothes dryers, masonry acid washing materials.

Clearances

All units require particular clearances for proper operation and service. Installer must make provisions for adequate combustion and ventilation air in accordance with section 5.3 of Air for Combustion and Ventilation of the National Fuel Gas Code, ANSI Z223.1 – Latest Edition (in U.S.A.), or Sections 7.2, 7.3, or 7.4 of Gas Installation Codes, CSA-B149.1 (in Canada) - Latest Edition, and/or applicable provisions of the local building codes. Refer to Table 4 for clearances required for combustible construction, servicing, and proper unit operation.

⚠ WARNING

Do not permit overhanging structures or shrubs to obstruct condenser air discharge outlet, combustion air inlet or vent outlets.

Rigging And Handling

Exercise care when moving the unit. Do not remove any packaging until the unit is near the place of installation. Rig the unit by attaching chain or cable slings to the lifting holes provided in the base rails. Spreader bars, whose length exceeds the largest dimension across the unit, **MUST** be used across the top of the unit.

⚠ CAUTION

If a unit is to be installed on a roof curb other than a UP roof curb, gasketing must be applied to all surfaces that come in contact with the unit underside.

⚠ CAUTION

Before lifting, make sure the unit weight is distributed equally on the rigging cables so it will lift evenly.

Units may be moved or lifted with a forklift. Slotted openings in the base rails are provided for this purpose.

LENGTH OF FORKS MUST BE A MINIMUM OF 60 INCHES.

⚠ CAUTION

All panels must be secured in place when the unit is lifted.

The condenser coils should be protected from rigging cable damage with plywood or other suitable material.

ZX08-14 Unit Weights

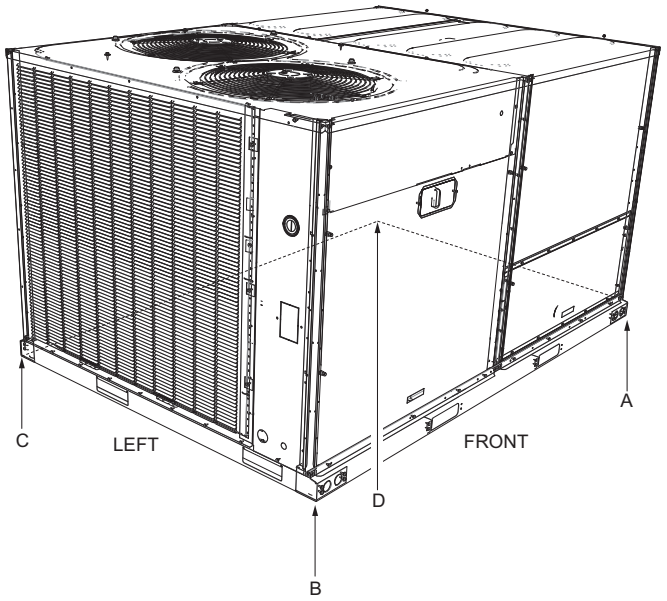

Figure 4: Unit 4 Point Load Weight

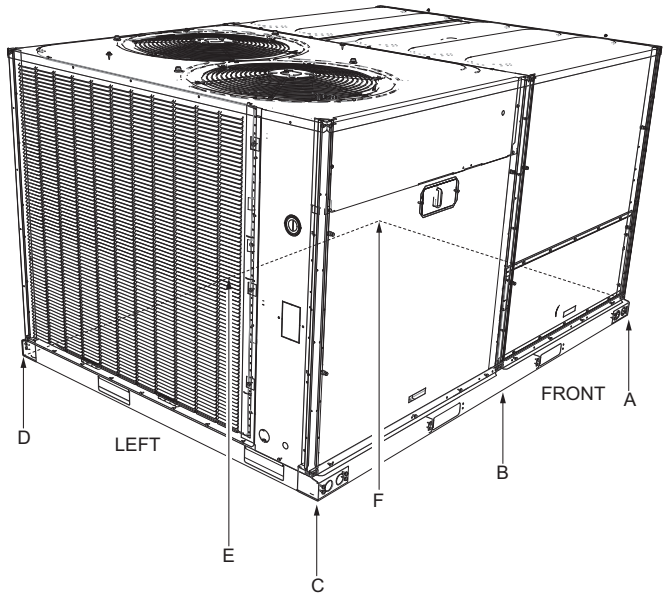

Figure 5: Unit 6 Point Load Weight

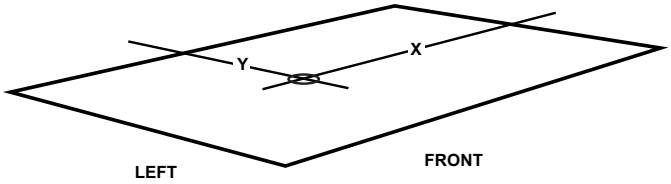

Figure 6: Center of Gravity

Table 2: ZX08-14 Corner Weights

Model	Size (Tons)	Weight (lbs.)		Center of Gravity		4 Point Load Location (lbs.)				6 Point Load Location (lbs.)					
		Shipping	Operating	X	Y	A	B	C	D	A	B	C	D	E	F
ZXE	08 (7.5)	796	791	47	36	214	248	177	152	139	153	169	121	109	99
ZXE	09 (8.5)	857	852	46	36	230	262	192	168	150	163	178	131	120	110
ZXE	12 (10)	884	879	46	36	242	271	193	172	158	171	184	131	122	113
ZXE	14 (12.5)	946	941	45	36	265	284	203	189	175	183	192	137	130	125
ZXG	08 (7.5)	898	893	46	37	251	285	190	168	164	178	194	129	119	109
ZXG	09 (8.5)	959	954	45	36	269	291	205	189	177	186	197	138	131	125
ZXG	12 (10)	990	985	45	37	284	301	206	194	187	195	203	139	133	128
ZXG	14 (12.5)	1052	1047	44	37	304	312	218	212	202	205	209	146	144	141

Table 3: ZX08-14 Unit Accessory Weights

Unit Accessory	Weights (lbs.)
Vertical Flow Dry Bulb Economizer Large Footprint	60
Horizontal Flow Dry Bulb Economizer Large Footprint Short	79
Horizontal Flow Dry Bulb Economizer Large Footprint Tall	82
Power Exhaust Vert Flow Large Footprint	75
Power Exhaust Horiz Flow Large Footprint	80
Hail Guard Kit Large Short Factory Installed	36
Hail Guard Kit Large Tall Factory Installed	44
Flue Extension Kit (1FE0416)	20
Curb Rigid 14" Large Footprint	126
Curb Rigid 24" Large Footprint	222

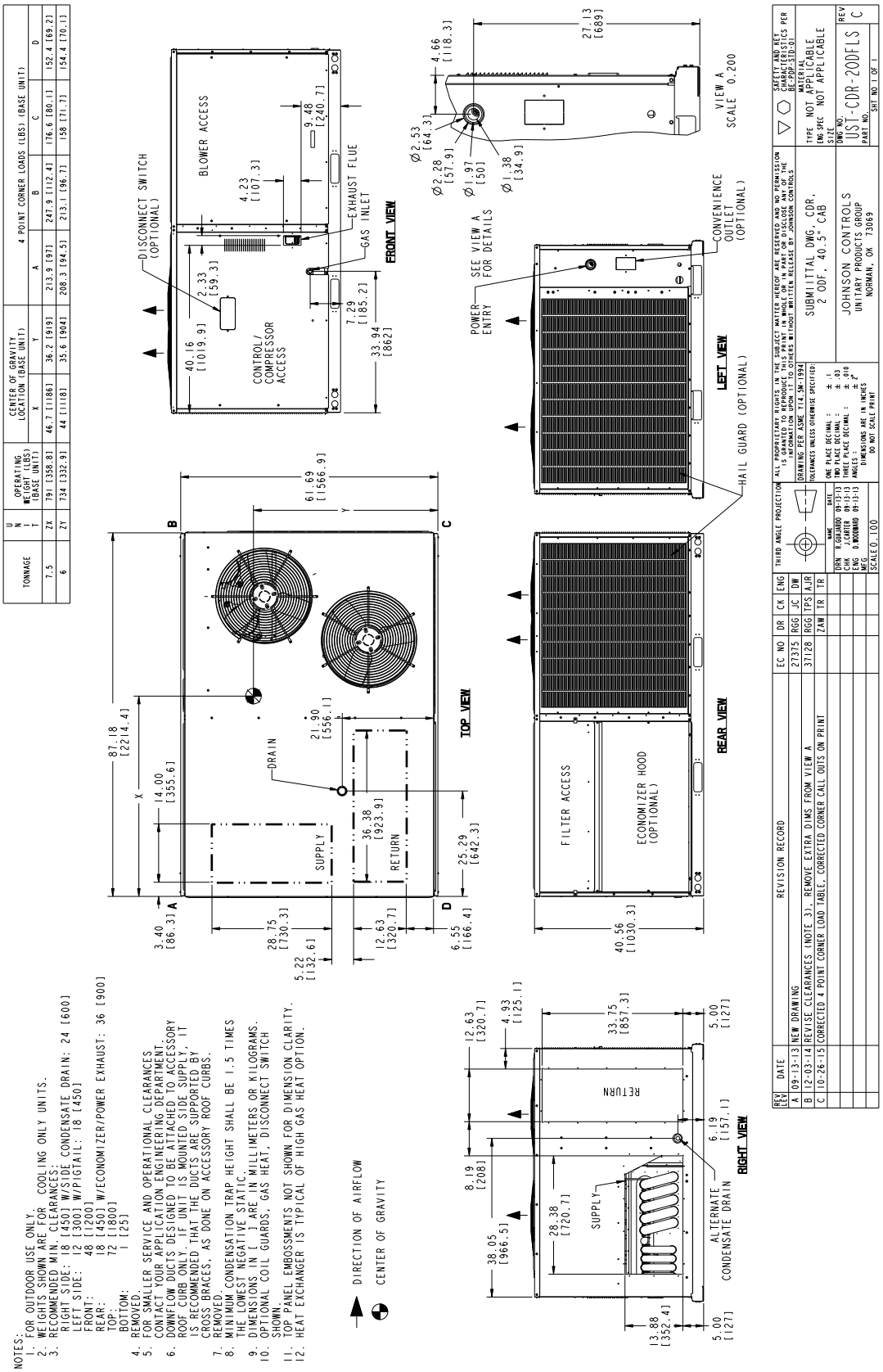

Figure 7: ZX08 Unit Dimensions

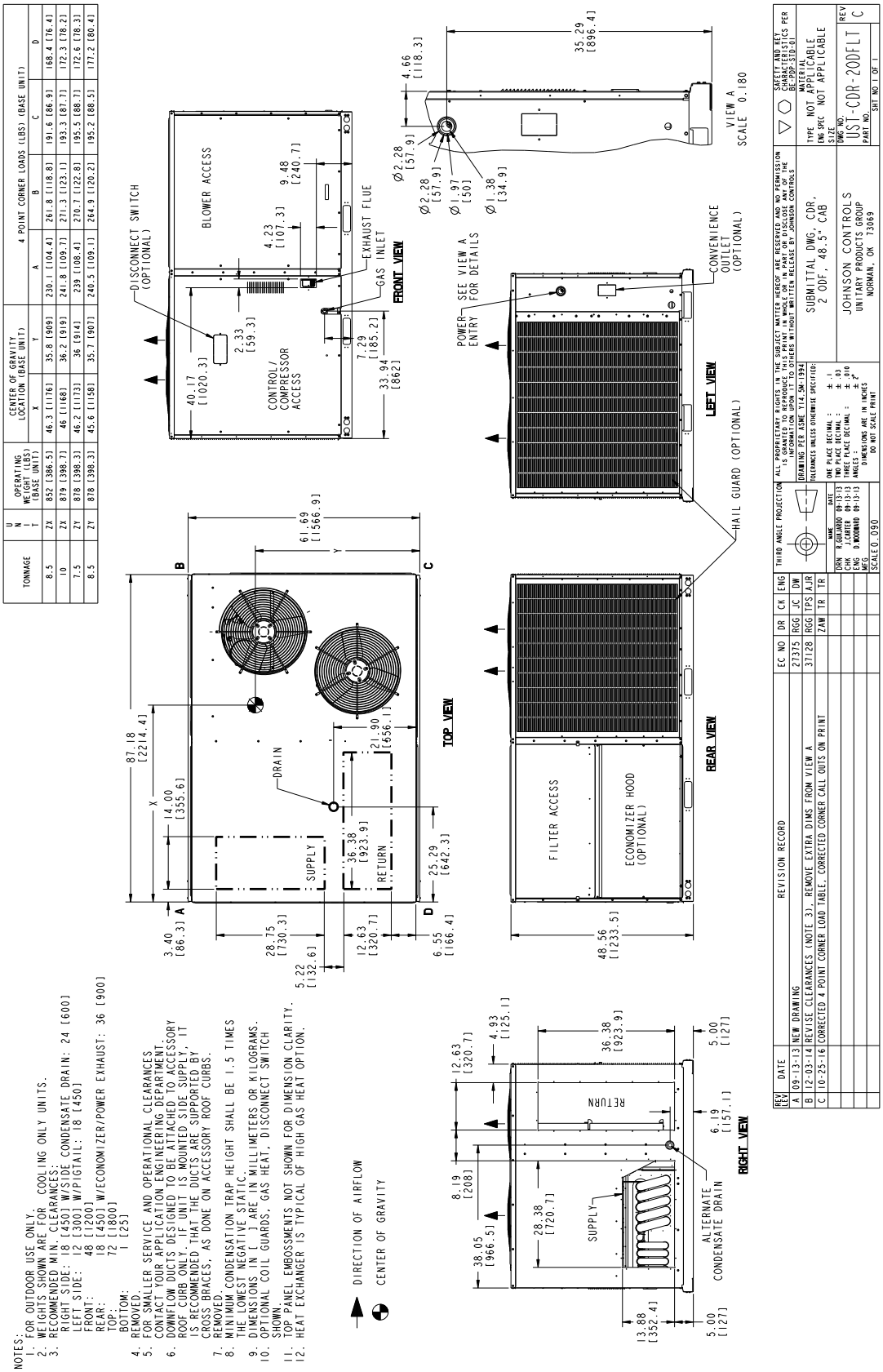

Figure 8: ZX09/12 Unit Dimensions

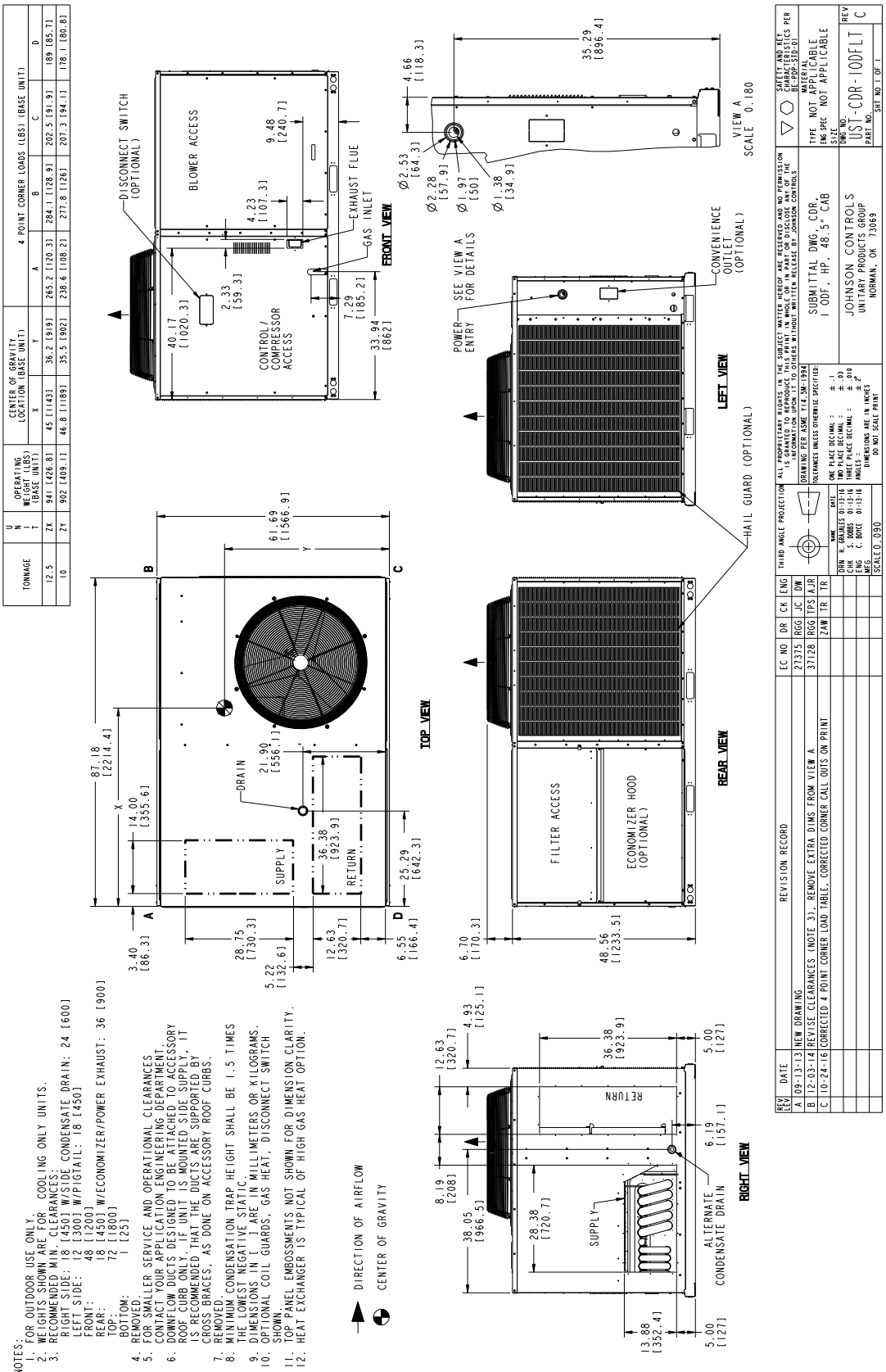

Figure 9: ZX14 Unit Dimensions

Table 4: ZX08-14 Unit Clearances

Direction	Distance (in.)	Direction	Distance (in.)
Top[1]	72	Right	18
Front	48	Left	12
Rear	18[2]/36[3]	Bottom[4]	1

1. Units must be installed outdoors. Over hanging structure or shrubs should not obscure condenser air discharge outlet.
2. Units without economizer or power exhaust.
3. Units equipped with an Economizer or Power Exhaust. Flue products must not be discharged within 10 Feet of the rear of the unit.
4. Units may be installed on combustible floors made from wood or class A, B or C roof covering materials.

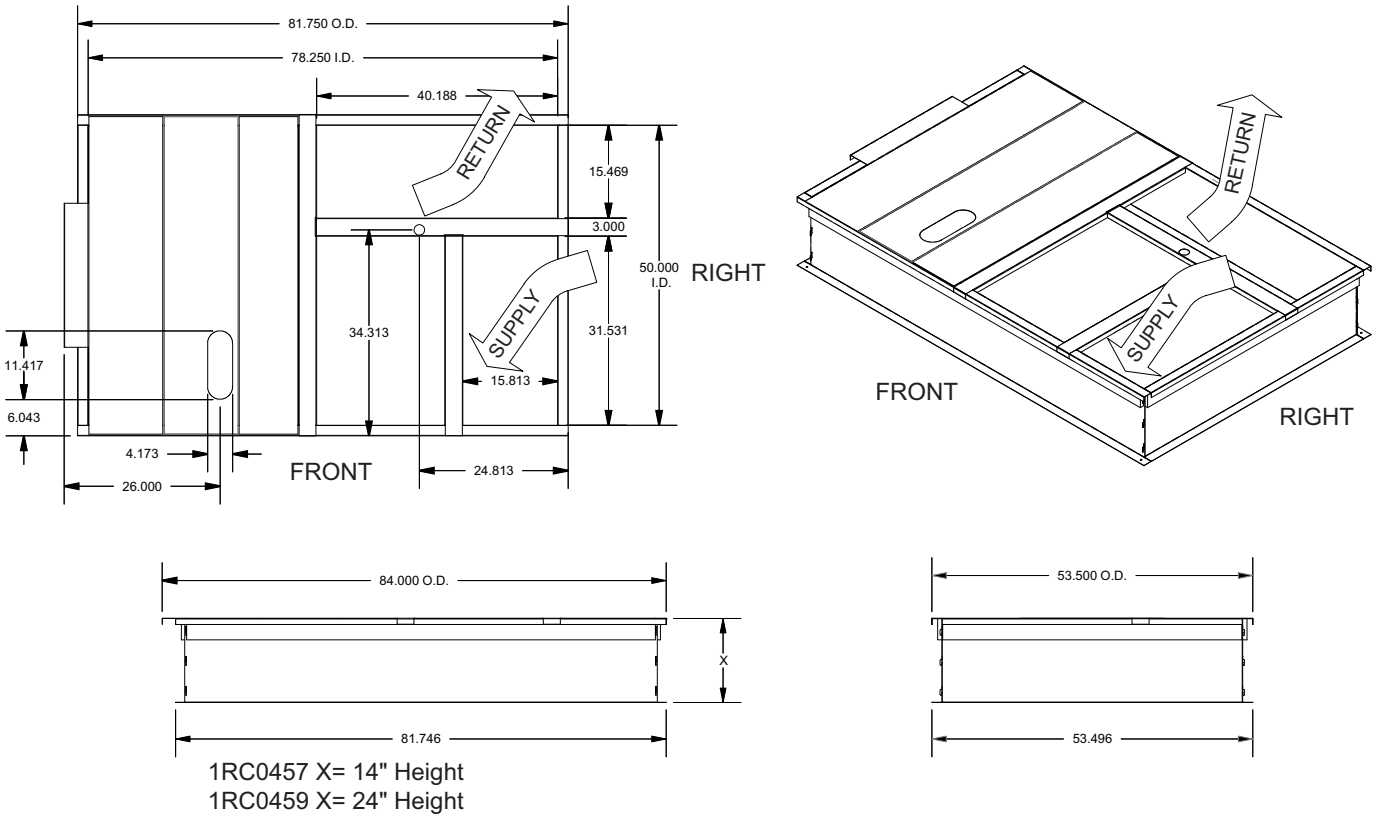

1RC0457 X= 14" Height
1RC0459 X= 24" Height

Notes:
1. Sides, ends, unit locator and cross support are 18-G90. Deck pans, R/A & S/A supports are 20-G90.
2. Full perimeter wood nailer.
3. Insulated deck pans.

Figure 10: 1RC0457, 1RC0459 Roof Curb Dimensions

Table 5: Unit Models used with 1RC0457, 1RC0459 Roof Curb

ZX08
ZX09
ZX12
ZX14

NOTE: If utilities are required thru the base of the unit or thru the roof curb the following field installed accessories can be purchased thru your dealer or contractor:

1TB0401 - Thru the base electrical and thru the curb gas

1TB0403 - Thru the base electrical and gas

Ductwork

Ductwork should be designed and sized according to the methods in Manual D of the Air Conditioning Contractors of America (ACCA) or as recommended by any other recognized authority such as ASHRAE or SMACNA.

A closed return duct system should be used. This will not preclude use of economizers or outdoor fresh air intake. The supply and return air duct connections at the unit should be made with flexible joints to minimize noise.

The supply and return air duct systems should be designed for the CFM and static pressure requirements of the job. They should NOT be sized to match the dimensions of the duct connections on the unit.

Refer to Figures 7 thru 9 for bottom and side air duct openings.

Duct Covers

Units are shipped with the side duct openings covered and a covering over the bottom of the unit. For bottom duct application, Models ZX08 require a filler plate to be removed from the return air opening, for all other models no other changes are necessary. For side duct application, remove the side duct covers and install over the bottom duct openings. The panels removed from the side duct connections are designed to be reused by securing each panel to its respective bottom duct opening. But keep in mind that the supply and return panels are installed with the painted surface DOWN, facing the bottom duct opening. The gasket must be removed from the insulation side of the duct cover so it is not directly exposed to the heating elements.The panels are secured by sliding them into slots in the back of the duct openings and screwing them to the base of the unit with screws (Use screws removed from original panel location.). Seals around duct openings must be tight.

⚠ CAUTION

When fastening ductwork to side duct flanges on unit, insert screws through duct flanges only. DO NOT insert screws through casing. Outdoor ductwork must be insulated and water-proofed.

Figure 11: Side Duct Cover Panels

NOTE: Shown with duct connection cover panel as shipped.

Figure 12: Bottom Return Opening For Side Duct Conversion

Figure 13: Bottom Supply Opening For Side Duct Conversion

Condensate Drain

A side condensate drain is provided to facilitate condensate piping. A condensate drain connection is available through the base pan for piping inside the roof curb. Trap the connection per Figure 14. The trap and drain lines should be protected from freezing.

Plumbing must conform to local codes. Use a sealing compound on male pipe threads. Install condensate drain line from the 3/4 inch NPT female connection on the unit to an open drain.

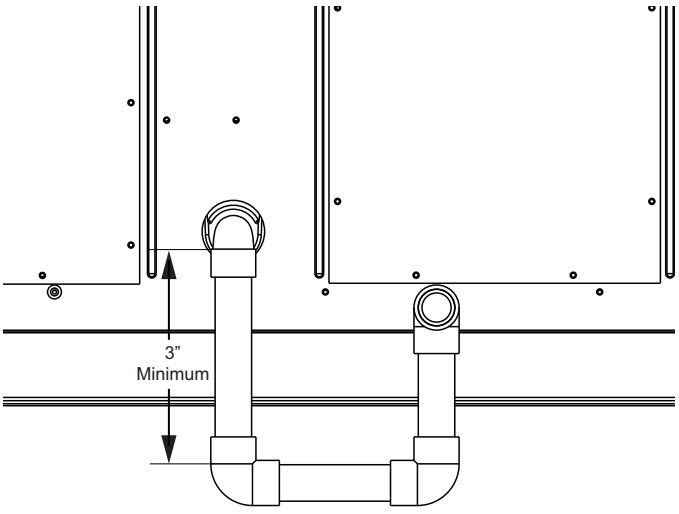

Figure 14: Condensate Drain

Compressors

The compressor used in this product is specifically designed to operate with R-410A Refrigerant and cannot be interchanged.

Power And Control Wiring

⚠ CAUTION

This system uses R-410A Refrigerant which operates at higher pressures than R-22. No other refrigerant may be used in this system.

The compressor also uses a refrigerant oil that is extremely hygroscopic, meaning it absorbs water readily. They can absorb 15 times as much water as other oils designed for HCFC and CFC refrigerants. Take all necessary precautions to avoid exposure of the oil to the atmosphere.

⚠ CAUTION

Do not leave the system open to the atmosphere. Unit damage could occur due to moisture being absorbed by the **refrigerant** in the system. This type of oil is highly susceptible to moisture absorption.

R-410A compressor lubricants are known to cause long term damage to some synthetic roofing materials.

⚠ CAUTION

Exposure, even if immediately cleaned up, may cause embrittlement (leading to cracking) to occur in one year or more. When performing any service that may risk exposure of compressor oil to the roof, take precautions to protect roofing.

Procedures which risk oil leakage include, but are not limited to, compressor replacement, repairing refrigerant leaks, replacing refrigerant components such as filter drier, pressure switch, metering device or coil.

Units are shipped with compressor mountings which are factory-adjusted and ready for operation.

⚠ CAUTION

Do not loosen compressor mounting bolts.

Filters

Two-inch filters are supplied with each unit. Four-inch filters may be used with no modification to the filter racks. Filters must always be installed ahead of evaporator coil and must be kept clean or replaced with same size and type. Dirty filters reduce the capacity of the unit and result in frosted coils or safety shutdown. Refer to physical data tables, for the number and size of filters needed for the unit. The unit should not be operated without filters properly installed.

Field wiring to the unit, fuses, and disconnects must conform to provisions of National Electrical Code (NEC), ANSI/NFPA No.

70 – Latest Edition (in U.S.A.), current Canadian Electrical Code C221, and/or local ordinances. The unit must be electrically grounded in accordance with NEC and CEC as specified above and/or local codes.

Voltage tolerances which must be maintained at the compressor terminals during starting and running conditions are indicated on the unit Rating Plate and Table 8.

⚠ CAUTION

208/230-3-60 and 208/230-1-60 units control transformers are factory wired for 230v. Change tap on transformer for 208v operation. See unit wiring diagram.

The internal wiring harnesses furnished with this unit are an integral part of the design certified unit. Field alteration to comply with electrical codes should not be required. If any of the wire supplied with the unit must be replaced, replacement wire must be of the type shown on the wiring diagram and the same minimum gauge as the replaced wire.

A disconnect must be utilized for these units. Factory installed disconnects are available. If installing a disconnect (field supplied), refer to Figures 7 thru 9 for the recommended mounting location.

⚠ CAUTION

Avoid damage to internal components if drilling holes for disconnect mounting.

NOTE: Since not all local codes allow the mounting of a disconnect on the unit, please confirm compliance with local code before mounting a disconnect on the unit.

Electrical line must be sized properly to carry the load. USE COPPER CONDUCTORS ONLY. Each unit must be wired with a separate branch circuit fed directly from the meter panel and properly fused.

⚠ CAUTION

When connecting electrical power and control wiring to the unit, water-proof connectors must be used so that water or moisture cannot be drawn into the unit during normal operation. The above water-proofing conditions will also apply when installing a field supplied disconnect switch.

⚠ CAUTION

When installing equipment in a facility with a 3 phase high-leg delta power supply, care must be taken to ensure that the high-leg conductor is not attached to either of the two legs of the (single phase, direct drive) X13 or ECM motors. Failure to do so can result in the motor acting erratically or not running at all.

Check for the high leg conductor by checking voltage of each phase to ground.

Example: A or L1 phase to ground, voltage reading is 120V. B or L2 phase to ground, voltage reading is 195 to 208V. C or L3 phase to ground, voltage reading is 120V. Therefore B or L2 phase is the high Leg. The high should always be wired to the center or B or L2 tap.

Note: Check all three phase motors and compressors for proper rotation after making a change. If it is necessary to change 3 phase motor rotation, swap A or L1 and C or L3 only.

Thermostat Wiring

A two stage thermostat must be used and should be located on an inside wall approximately 56 inch above the floor where it will not be subject to drafts, sun exposure or heat from electrical fixtures or appliances. Follow the manufacturer's instructions enclosed with thermostat for general installation procedure. Seven (7) color-coded, insulated wires should be used to connect the thermostat to the unit. Refer to Table 6 for control wire sizing and maximum length.

Table 6: Control Wire Sizes

Wire Size	Maximum Length[1]
18 AWG	150 Feet

1. From the unit to the thermostat and back to the unit.

Typical Field Power and Control Wiring

Typical Power Wiring

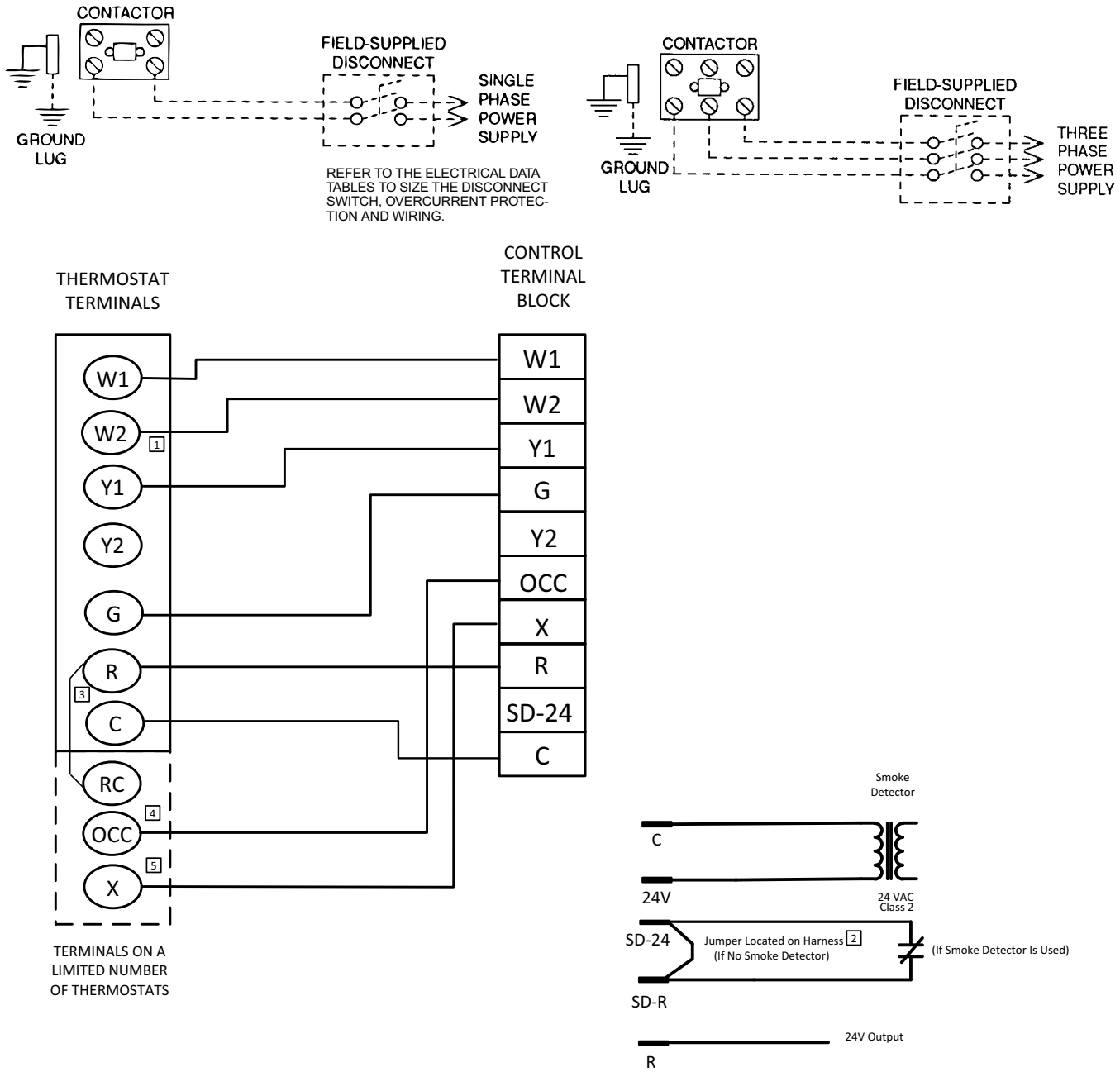

1 Second stage heating not required on single stage heating units.

2 Jumper is required if there is no Smoke Detector circuit.

3 Jumper is required for any combination of R, RC, or RH.

4 OCC is an output from the thermostat to indicate the Occupied condition.

5 X is an input to the thermostat to display Error Status conditions.

Figure 15: Typical Smart Equipment™ Control Wiring

Table 7: Electrical Data

ZX08-14 Standard Static Indoor Blower - Without Powered Convenience Outlet

Size (Tons)	Nominal Unit Voltage	Compressor 1			Compressor 2			OD Fan Motors (each)	Supply Blower Motor	Pwr Exh Motor	Pwr Conv Outlet	Electric Heat Field Installed Kit 2EK045*				MCA[1] (Amps)	Min Fuse[2]/ Breaker[3] Size (Amps)	Max Fuse[2]/ Breaker[3] Size (Amps)	Min Discon-nect Rating[4]		MCA[1] w/Pwr Exh (Amps)	Min Fuse[2]/ Breaker[3] Size w/ Pwr Exh (Amps)	Max Fuse[2]/ Breaker[3] Size w/ Pwr Exh (Amps)	Min Discon-nect Rating[4]/ Pwr Exh	
		RLA	LRA	MCC	RLA	LRA	MCC					Model	kW	Stages	Amps				FLA	LRA				FLA	LRA
With VFD																									
08 (7.5)	208-3-60	13.6	83.1	21	13.6	83.1	21	2.3	7	1.1		None	-	-	-	42.2	45	50	45	246	44.4	45	50	47	256
												11725	12	1	33.3	50.4	60	60	46	246	53.1	60	60	49	256
												12525	18.6	1	51.6	73.3	80	80	67	246	76	80	80	70	256
												13225	24	1	66.6	92	100	100	85	246	94.8	100	100	87	256
												14225	31.8	2	88.3	119.1	125	125	110	246	121.9	125	125	112	256
	230-3-60	13.6	83.1	21	13.6	83.1	21	2.3	7.2	1		None	-	-	-	42.4	45	50	45	248	44.4	45	50	47	243
												11725	16	1	38.5	57.1	60	60	53	248	59.6	60	60	55	243
												12525	24.8	1	59.7	83.6	90	90	77	248	86.1	90	90	79	243
												13225	32	1	77	105.3	110	110	97	248	107.8	110	110	99	243
												14225	42.4	2	102	136.5	150	150	126	248	139	150	150	128	243
	460-3-60	6.1	41	10	6.1	41	10	1.3	3.6	0.5		None	-	-	-	19.9	20	25	21	125	20.9	25	25	22	121
												11746	16.5	1	19.8	29.3	30	30	27	125	30.5	35	35	28	121
												12846	27.8	1	33.4	46.3	50	50	43	125	47.5	50	50	44	121
												13346	33	1	39.7	54.1	60	60	50	125	55.4	60	60	51	121
												14246	41.7	2	50.2	67.3	70	70	62	125	68.5	70	70	63	121
	575-3-60	4.2	33	7	4.2	33	7	1.1	2.5	0.4		None	-	-	-	14.2	15	15	15	93	15	15	15	16	90
												11758	17	1	16.4	23.6	25	25	22	93	24.6	25	25	23	90
												13458	34	1	32.7	44	45	45	40	93	45	45	45	41	90
09 (8.5)	208-3-60	14.5	98	23	14.5	98	23	2.3	7	1.1		None	-	-	-	44.2	45	50	47	275	46.4	50	50	49	285
												11725	12	1	33.3	50.4	60	60	47	275	53.1	60	60	49	285
												12525	18.6	1	51.6	73.3	80	80	67	275	76	80	80	70	285
												13225	24	1	66.6	92	100	100	85	275	94.8	100	100	87	285
												14225	31.8	2	88.3	119.1	125	125	110	275	121.9	125	125	112	285
	230-3-60	14.5	98	23	14.5	98	23	2.3	7.2	1		None	-	-	-	44.4	45	50	47	278	46.4	50	60	49	272
												11725	16	1	38.5	57.1	60	60	53	278	59.6	60	60	55	272
												12525	24.8	1	59.7	83.6	90	90	77	278	86.1	90	90	79	272
												13225	32	1	77	105.3	110	110	97	278	107.8	110	110	99	272
												14225	42.4	2	102	136.5	150	150	126	278	139	150	150	128	272
	460-3-60	6.3	55	10	6.3	55	10	1.3	3.6	0.5		None	-	-	-	20.4	25	25	22	153	21.4	25	25	23	149
												11746	16.5	1	19.8	29.3	30	30	27	153	30.5	35	35	28	149
												12846	27.8	1	33.4	46.3	50	50	43	153	47.5	50	50	44	149
												13346	33	1	39.7	54.1	60	60	50	153	55.4	60	60	51	149
												14246	41.7	2	50.2	67.3	70	70	62	153	68.5	70	70	63	149
	575-3-60	6	41	9	6	41	9	1.1	2.5	0.4		None	-	-	-	18.2	20	20	19	109	19	20	20	20	106
												11758	17	1	16.4	23.6	25	25	22	109	24.6	25	25	23	106
												13458	34	1	32.7	44	45	45	40	109	45	45	45	41	106
12 (10)	208-3-60	16	110	25	15.6	110	24	2.3	7	1.1		None	-	-	-	47.2	50	60	50	299	49.4	50	60	52	309
												11725	12	1	33.3	50.4	60	60	50	299	53.1	60	60	52	309
												12525	18.6	1	51.6	73.3	80	80	67	299	76	80	80	70	309
												13225	24	1	66.6	92	100	100	85	299	94.8	100	100	87	309
												14225	31.8	2	88.3	119.1	125	125	110	299	121.9	125	125	112	309
	230-3-60	16	110	25	15.6	110	24	2.3	7.2	1		None	-	-	-	47.4	50	60	50	302	49.4	50	60	52	296
												11725	16	1	38.5	57.1	60	60	53	302	59.6	60	60	55	296
												12525	24.8	1	59.7	83.6	90	90	77	302	86.1	90	90	79	296
												13225	32	1	77	105.3	110	110	97	302	107.8	110	110	99	296
												14225	42.4	2	102	136.5	150	150	126	302	139	150	150	128	296
	460-3-60	7.8	52	12	7.8	52	12	1.3	3.6	0.5		None	-	-	-	23.8	25	30	25	147	24.8	25	30	26	143
												11746	16.5	1	19.8	29.3	30	30	27	147	30.5	35	35	28	143
												12846	27.8	1	33.4	46.3	50	50	43	147	47.5	50	50	44	143
												13346	33	1	39.7	54.1	60	60	50	147	55.4	60	60	51	143
												14246	41.7	2	50.2	67.3	70	70	62	147	68.5	70	70	63	143
	575-3-60	5.7	38.9	9	5.8	38.9	9	1.1	2.5	0.4		None	-	-	-	17.7	20	20	19	105	18.5	20	20	20	102
												11758	17	1	16.4	23.6	25	25	22	105	24.6	25	25	23	102
												13458	34	1	32.7	44	45	45	40	105	45	45	45	41	102

ZX08-14 Standard Static Indoor Blower - Without Powered Convenience Outlet (Continued)

Size (Tons)	Nominal Unit Voltage	Compressor 1			Compressor 2			OD Fan Motors (each)	Supply Blower Motor	Pwr Exh Motor	Pwr Conv Outlet	Electric Heat Field Installed Kit 2EK045*				MCA[1] (Amps)	Min Fuse[2]/ Breaker[3] Size (Amps)	Max Fuse[2]/ Breaker[3] Size (Amps)	Min Discon-nect Rating[4]		MCA[1] w/Pwr Exh (Amps)	Min Fuse[2]/ Breaker[3] Size w/ Pwr Exh (Amps)	Max Fuse[2]/ Breaker[3] Size w/ Pwr Exh (Amps)	Min Discon-nect Rating[4]/ Pwr Exh	
		RLA	LRA	MCC	RLA	LRA	MCC					Model	kW	Stages	Amps				FLA	LRA				FLA	LRA
14 (12.5)	208-3-60	19.6	136	31	19.6	136	31	5.8	8.9	1.1		None	-	-	-	58.8	60	70	62	371	61	70	70	65	381
												11725	12	1	33.3	58.8	60	70	62	371	61	70	70	65	381
												12525	18.6	1	51.6	75.6	80	80	70	371	78.4	80	80	72	381
												13225	24	1	66.6	94.4	100	100	87	371	97.1	100	100	89	381
												14225	31.8	2	88.3	121.5	125	125	112	371	124.3	125	125	114	381
	230-3-60	19.6	136	31	19.6	136	31	5.2	8.2	1		None	-	-	-	57.5	60	70	60	370	59.5	60	70	63	375
												11725	16	1	38.5	58.4	60	70	60	370	60.9	70	70	63	375
												12525	24.8	1	59.7	84.9	90	90	78	370	87.4	90	90	80	375
												13225	32	1	77	106.5	110	110	98	370	109	110	110	100	375
												14225	42.4	2	102	137.8	150	150	127	370	140.3	150	150	129	375
	460-3-60	8.2	66.1	13	8.2	66.1	13	2.9	4.1	0.5		None	-	-	-	25.5	30	30	27	178	26.5	30	30	28	180
												11746	16.5	1	19.8	29.9	30	30	27	178	31.1	35	35	29	180
												12846	27.8	1	33.4	46.9	50	50	43	178	48.1	50	50	44	180
												13346	33	1	39.7	54.8	60	60	50	178	56	60	60	52	180
												14246	41.7	2	50.2	67.9	70	70	62	178	69.1	70	70	64	180
	575-3-60	6.6	55.3	10	6.6	55.3	10	2.2	3.2	0.4		None	-	-	-	20.3	25	25	21	148	21.1	25	25	22	150
												11758	17	1	16.4	24.5	25	25	23	148	25.5	30	30	23	150
												13458	34	1	32.7	44.9	45	45	41	148	45.9	50	50	42	150

1. Minimum Circuit Ampacity.
2. Dual Element, Time Delay Type.
3. HACR type per NEC.
4. Non-fused Disconnect, Verify on the unit nameplate that the disconnect is properly sized for the application. Units with field installed electric heat kits may exceed the factory installed disconnect amperage rating.

ZX08-14 Standard Static Indoor Blower - With Powered Convenience Outlet

Size (Tons)	Nominal Unit Voltage	Compressor 1			Compressor 2			OD Fan Motors (each)	Supply Blower Motor	Pwr Exh Motor	Pwr Conv Outlet	Electric Heat Field Installed Kit 2EK045*				MCA[1] (Amps)	Min Fuse[2]/ Breaker[3] Size (Amps)	Max Fuse[2]/ Breaker[3] Size (Amps)	Min Discon-nect Rating[4]		MCA[1] w/Pwr Exh (Amps)	Min Fuse[2]/ Breaker[3] Size w/ Pwr Exh (Amps)	Max Fuse[2]/ Breaker[3] Size w/ Pwr Exh (Amps)	Min Discon-nect Rating[4]/ Pwr Exh	
		RLA	LRA	MCC	RLA	LRA	MCC					Model	kW	Stages	Amps				FLA	LRA				FLA	LRA
With VFD																									
08 (7.5)	208-3-60	13.6	83.1	21	13.6	83.1	21	2.3	7	1.1	8.6	None	-	-	-	46.5	50	60	50	250	48.7	50	60	52	260
												11725	12	1	33.3	55.8	60	60	51	250	58.5	60	60	54	260
												12525	18.6	1	51.6	78.6	80	80	72	250	81.4	90	90	75	260
												13225	24	1	66.6	97.4	100	100	90	250	100.1	110	110	92	260
												14225	31.8	2	88.3	124.5	125	125	115	250	127.3	150	150	117	260
	230-3-60	13.6	83.1	21	13.6	83.1	21	2.3	7.2	1	8.6	None	-	-	-	46.7	50	60	50	252	48.7	50	60	52	247
												11725	16	1	38.5	62.5	70	70	58	252	65	70	70	60	247
												12525	24.8	1	59.7	89	90	90	82	252	91.5	100	100	84	247
												13225	32	1	77	110.6	125	125	102	252	113.1	125	125	104	247
												14225	42.4	2	102	141.9	150	150	131	252	144.4	150	150	133	247
	460-3-60	6.1	41	10	6.1	41	10	1.3	3.6	0.5	8.6	None	-	-	-	22.1	25	25	24	127	23.1	25	25	25	123
												11746	16.5	1	19.8	31.9	35	35	29	127	33.2	35	35	31	123
												12846	27.8	1	33.4	48.9	50	50	45	127	50.2	60	60	46	123
												13346	33	1	39.7	56.8	60	60	52	127	58.1	60	60	53	123
												14246	41.7	2	50.2	69.9	70	70	64	127	71.2	80	80	65	123
	575-3-60	4.2	33	7	4.2	33	7	1.1	2.5	0.4	8.6	None	-	-	-	15.9	20	20	17	95	16.7	20	20	18	92
												11758	17	1	16.4	25.8	30	30	24	95	26.8	30	30	25	92
												13458	34	1	32.7	46.2	50	50	42	95	47.2	50	50	43	92
09 (8.5)	208-3-60	14.5	98	23	14.5	98	23	2.3	7	1.1	8.6	None	-	-	-	48.5	50	60	52	280	50.7	60	60	54	290
												11725	12	1	33.3	55.8	60	60	52	280	58.5	60	60	54	290
												12525	18.6	1	51.6	78.6	80	80	72	280	81.4	90	90	75	290
												13225	24	1	66.6	97.4	100	100	90	280	100.1	110	110	92	290
												14225	31.8	2	88.3	124.5	125	125	115	280	127.3	150	150	117	290
	230-3-60	14.5	98	23	14.5	98	23	2.3	7.2	1	8.6	None	-	-	-	48.7	50	60	52	282	50.7	60	60	54	277
												11725	16	1	38.5	62.5	70	70	58	282	65	70	70	60	277
												12525	24.8	1	59.7	89	90	90	82	282	91.5	100	100	84	277
												13225	32	1	77	110.6	125	125	102	282	113.1	125	125	104	277
												14225	42.4	2	102	141.9	150	150	131	282	144.4	150	150	133	277
	460-3-60	6.3	55	10	6.3	55	10	1.3	3.6	0.5	8.6	None	-	-	-	22.6	25	25	24	155	23.6	25	25	25	151
												11746	16.5	1	19.8	31.9	35	35	29	155	33.2	35	35	31	151
												12846	27.8	1	33.4	48.9	50	50	45	155	50.2	60	60	46	151
												13346	33	1	39.7	56.8	60	60	52	155	58.1	60	60	53	151
												14246	41.7	2	50.2	69.9	70	70	64	155	71.2	80	80	65	151
	575-3-60	6	41	9	6	41	9	1.1	2.5	0.4	8.6	None	-	-	-	19.9	20	25	21	111	20.7	25	25	22	108
												11758	17	1	16.4	25.8	30	30	24	111	26.8	30	30	25	108
												13458	34	1	32.7	46.2	50	50	42	111	47.2	50	50	43	108
12 (10)	208-3-60	16	110	25	15.6	110	24	2.3	7	1.1	8.6	None	-	-	-	51.5	60	60	55	304	53.7	60	60	57	314
												11725	12	1	33.3	55.8	60	60	55	304	58.5	60	60	57	314
												12525	18.6	1	51.6	78.6	80	80	72	304	81.4	90	90	75	314
												13225	24	1	66.6	97.4	100	100	90	304	100.1	110	110	92	314
												14225	31.8	2	88.3	124.5	125	125	115	304	127.3	150	150	117	314
	230-3-60	16	110	25	15.6	110	24	2.3	7.2	1	8.6	None	-	-	-	51.7	60	60	55	306	53.7	60	60	57	301
												11725	16	1	38.5	62.5	70	70	58	306	65	70	70	60	301
												12525	24.8	1	59.7	89	90	90	82	306	91.5	100	100	84	301
												13225	32	1	77	110.6	125	125	102	306	113.1	125	125	104	301
												14225	42.4	2	102	141.9	150	150	131	306	144.4	150	150	133	301
	460-3-60	7.8	52	12	7.8	52	12	1.3	3.6	0.5	8.6	None	-	-	-	26	30	30	28	149	27	30	30	29	145
												11746	16.5	1	19.8	31.9	35	35	29	149	33.2	35	35	31	145
												12846	27.8	1	33.4	48.9	50	50	45	149	50.2	60	60	46	145
												13346	33	1	39.7	56.8	60	60	52	149	58.1	60	60	53	145
												14246	41.7	2	50.2	69.9	70	70	64	149	71.2	80	80	65	145
	575-3-60	5.7	38.9	9	5.8	38.9	9	1.1	2.5	0.4	8.6	None	-	-	-	19.4	20	25	21	107	20.2	25	25	22	104
												11758	17	1	16.4	25.8	30	30	24	107	26.8	30	30	25	104
												13458	34	1	32.7	46.2	50	50	42	107	47.2	50	50	43	104

ZX08-14 Standard Static Indoor Blower - With Powered Convenience Outlet (Continued)

Size (Tons)	Nominal Unit Voltage	Compressor 1			Compressor 2			OD Fan Motors (each)	Supply Blower Motor	Pwr Exh Motor	Pwr Conv Outlet	Electric Heat Field Installed Kit 2EK045*				MCA[1] (Amps)	Min Fuse[2]/ Breaker[3] Size (Amps)	Max Fuse[2]/ Breaker[3] Size (Amps)	Min Discon-nect Rating[4]		MCA[1] w/Pwr Exh (Amps)	Min Fuse[2]/ Breaker[3] Size w/ Pwr Exh (Amps)	Max Fuse[2]/ Breaker[3] Size w/ Pwr Exh (Amps)	Min Discon-nect Rating[4]/ Pwr Exh	
		RLA	LRA	MCC	RLA	LRA	MCC					Model	kW	Stages	Amps				FLA	LRA				FLA	LRA
14 (12.5)	208-3-60	19.6	136	31	19.6	136	31	5.8	8.9	1.1	8.6	None	-	-	-	63.1	70	80	67	375	65.3	70	80	69	385
												11725	12	1	33.3	63.1	70	80	67	375	65.3	70	80	69	385
												12525	18.6	1	51.6	81	90	90	75	375	83.8	90	90	77	385
												13225	24	1	66.6	99.8	100	100	92	375	102.5	110	110	94	385
												14225	31.8	2	88.3	126.9	150	150	117	375	129.6	150	150	119	385
	230-3-60	19.6	136	31	19.6	136	31	5.2	8.2	1	8.6	None	-	-	-	61.8	70	80	65	374	63.8	70	80	68	379
												11725	16	1	38.5	63.8	70	80	65	374	66.3	70	80	68	379
												12525	24.8	1	59.7	90.3	100	100	83	374	92.8	100	100	85	379
												13225	32	1	77	111.9	125	125	103	374	114.4	125	125	105	379
												14225	42.4	2	102	143.1	150	150	132	374	145.6	150	150	134	379
	460-3-60	8.2	66.1	13	8.2	66.1	13	2.9	4.1	0.5	8.6	None	-	-	-	27.7	30	35	29	180	28.7	30	35	31	182
												11746	16.5	1	19.8	32.6	35	35	30	180	33.8	35	35	31	182
												12846	27.8	1	33.4	49.6	50	50	46	180	50.8	60	60	47	182
												13346	33	1	39.7	57.4	60	60	53	180	58.7	60	60	54	182
												14246	41.7	2	50.2	70.6	80	80	65	180	71.8	80	80	66	182
	575-3-60	6.6	55.3	10	6.6	55.3	10	2.2	3.2	0.4	8.6	None	-	-	-	22	25	25	23	150	22.8	25	25	24	152
												11758	17	1	16.4	26.7	30	30	25	150	27.7	30	30	25	152
												13458	34	1	32.7	47	50	50	43	150	48	50	50	44	152

1. Minimum Circuit Ampacity.
2. Dual Element, Time Delay Type.
3. HACR type per NEC.
4. Non-fused Disconnect, Verify on the unit nameplate that the disconnect is properly sized for the application. Units with field installed electric heat kits may exceed the factory installed disconnect amperage rating.

ZX08-14 Medium Static Indoor Blower - Without Powered Convenience Outlet

Size (Tons)	Nominal Unit Voltage	Compressor 1			Compressor 2			OD Fan Motors (each)	Supply Blower Motor	Pwr Exh Motor	Pwr Conv Outlet	Electric Heat Field Installed Kit 2EK045*				MCA[1] (Amps)	Min Fuse[2]/ Breaker[3] Size (Amps)	Max Fuse[2]/ Breaker[3] Size (Amps)	Min Discon-nect Rating[4]		MCA[1] w/Pwr Exh (Amps)	Min Fuse[2]/ Breaker[3] Size w/ Pwr Exh (Amps)	Max Fuse[2]/ Breaker[3] Size w/ Pwr Exh (Amps)	Min Discon-nect Rating[4]/ Pwr Exh	
		RLA	LRA	MCC	RLA	LRA	MCC					Model	kW	Stages	Amps				FLA	LRA				FLA	LRA
With VFD																									
08 (7.5)	208-3-60	13.6	83.1	21	13.6	83.1	21	2.3	8.9	1.1		None	-	-	-	44.1	45	50	47	262	46.3	50	50	49	272
												11725	12	1	33.3	52.8	60	60	49	262	55.5	60	60	51	272
												12525	18.6	1	51.6	75.6	80	80	70	262	78.4	80	80	72	272
												13225	24	1	66.6	94.4	100	100	87	262	97.1	100	100	89	272
												14225	31.8	2	88.3	121.5	125	125	112	262	124.3	125	125	114	272
	230-3-60	13.6	83.1	21	13.6	83.1	21	2.3	8.2	1		None	-	-	-	43.4	45	50	46	265	45.4	50	50	48	260
												11725	16	1	38.5	58.4	60	60	54	265	60.9	70	70	56	260
												12525	24.8	1	59.7	84.9	90	90	78	265	87.4	90	90	80	260
												13225	32	1	77	106.5	110	110	98	265	109	110	110	100	260
												14225	42.4	2	102	137.8	150	150	127	265	140.3	150	150	129	260
	460-3-60	6.1	41	10	6.1	41	10	1.3	4.1	0.5		None	-	-	-	20.4	25	25	22	128	21.4	25	25	23	125
												11746	16.5	1	19.8	29.9	30	30	27	128	31.1	35	35	29	125
												12846	27.8	1	33.4	46.9	50	50	43	128	48.1	50	50	44	125
												13346	33	1	39.7	54.8	60	60	50	128	56	60	60	52	125
												14246	41.7	2	50.2	67.9	70	70	62	128	69.1	70	70	64	125
	575-3-60	4.2	33	7	4.2	33	7	1.1	3.2	0.4		None	-	-	-	14.9	15	15	16	102	15.7	20	20	17	99
												11758	17	1	16.4	24.5	25	25	23	102	25.5	30	30	23	99
												13458	34	1	32.7	44.9	45	45	41	102	45.9	50	50	42	99
09 (8.5)	208-3-60	14.5	98	23	14.5	98	23	2.3	7	1.1		None	-	-	-	44.2	45	50	47	275	46.4	50	50	49	285
												11725	12	1	33.3	50.4	60	60	47	275	53.1	60	60	49	285
												12525	18.6	1	51.6	73.3	80	80	67	275	76	80	80	70	285
												13225	24	1	66.6	92	100	100	85	275	94.8	100	100	87	285
												14225	31.8	2	88.3	119.1	125	125	110	275	121.9	125	125	112	285
	230-3-60	14.5	98	23	14.5	98	23	2.3	7.2	1		None	-	-	-	44.4	45	50	47	278	46.4	50	60	49	272
												11725	16	1	38.5	57.1	60	60	53	278	59.6	60	60	55	272
												12525	24.8	1	59.7	83.6	90	90	77	278	86.1	90	90	79	272
												13225	32	1	77	105.3	110	110	97	278	107.8	110	110	99	272
												14225	42.4	2	102	136.5	150	150	126	278	139	150	150	128	272
	460-3-60	6.3	55	10	6.3	55	10	1.3	3.6	0.5		None	-	-	-	20.4	25	25	22	153	21.4	25	25	23	149
												11746	16.5	1	19.8	29.3	30	30	27	153	30.5	35	35	28	149
												12846	27.8	1	33.4	46.3	50	50	43	153	47.5	50	50	44	149
												13346	33	1	39.7	54.1	60	60	50	153	55.4	60	60	51	149
												14246	41.7	2	50.2	67.3	70	70	62	153	68.5	70	70	63	149
	575-3-60	6	41	9	6	41	9	1.1	2.5	0.4		None	-	-	-	18.2	20	20	19	109	19	20	20	20	106
												11758	17	1	16.4	23.6	25	25	22	109	24.6	25	25	23	106
												13458	34	1	32.7	44	45	45	40	109	45	45	45	41	106
12 (10)	208-3-60	16	110	25	15.6	110	24	2.3	9.9	1.1		None	-	-	-	50.1	60	60	53	312	52.3	60	60	56	322
												11725	12	1	33.3	54	60	60	53	312	56.8	60	60	56	322
												12525	18.6	1	51.6	76.9	80	80	71	312	79.6	80	80	73	322
												13225	24	1	66.6	95.6	100	100	88	312	98.4	100	100	91	322
												14225	31.8	2	88.3	122.8	125	125	113	312	125.5	150	150	115	322
	230-3-60	16	110	25	15.6	110	24	2.3	9.4	1		None	-	-	-	49.6	50	60	52	321	51.6	60	60	55	315
												11725	16	1	38.5	59.9	60	60	55	321	62.4	70	70	57	315
												12525	24.8	1	59.7	86.4	90	90	79	321	88.9	90	90	82	315
												13225	32	1	77	108	110	110	99	321	110.5	125	125	102	315
												14225	42.4	2	102	139.3	150	150	128	321	141.8	150	150	130	315
	460-3-60	7.8	52	12	7.8	52	12	1.3	4.7	0.5		None	-	-	-	24.9	25	30	26	156	25.9	30	30	27	152
												11746	16.5	1	19.8	30.6	35	35	28	156	31.9	35	35	29	152
												12846	27.8	1	33.4	47.6	50	50	44	156	48.9	50	50	45	152
												13346	33	1	39.7	55.5	60	60	51	156	56.8	60	60	52	152
												14246	41.7	2	50.2	68.6	70	70	63	156	69.9	70	70	64	152
	575-3-60	5.7	38.9	9	5.8	38.9	9	1.1	4.3	0.4		None	-	-	-	19.5	20	25	21	127	20.3	25	25	22	124
												11758	17	1	16.4	25.9	30	30	24	127	26.9	30	30	25	124
												13458	34	1	32.7	46.3	50	50	43	127	47.3	50	50	43	124

ZX08-14 Medium Static Indoor Blower - Without Powered Convenience Outlet (Continued)

Size (Tons)	Nominal Unit Voltage	Compressor 1			Compressor 2			OD Fan Motors (each)	Supply Blower Motor	Pwr Exh Motor	Pwr Conv Outlet	Electric Heat Field Installed Kit 2EK045*				MCA[1] (Amps)	Min Fuse[2]/ Breaker[3] Size (Amps)	Max Fuse[2]/ Breaker[3] Size (Amps)	Min Discon-nect Rating[4]		MCA[1] w/Pwr Exh (Amps)	Min Fuse[2]/ Breaker[3] Size w/ Pwr Exh (Amps)	Max Fuse[2]/ Breaker[3] Size w/ Pwr Exh (Amps)	Min Discon-nect Rating[4]/ Pwr Exh	
		RLA	LRA	MCC	RLA	LRA	MCC					Model	kW	Stages	Amps				FLA	LRA				FLA	LRA
14 (12.5)	208-3-60	19.6	136	31	19.6	136	31	5.8	9.9	1.1		None	-	-	-	59.8	60	70	63	367	62	70	80	66	377
												11725	12	1	33.3	59.8	60	70	63	367	62	70	80	66	377
												12525	18.6	1	51.6	76.9	80	80	71	367	79.6	80	80	73	377
												13225	24	1	66.6	95.6	100	100	88	367	98.4	100	100	91	377
												14225	31.8	2	88.3	122.8	125	125	113	367	125.5	150	150	115	377
	230-3-60	19.6	136	31	19.6	136	31	5.2	9.4	1		None	-	-	-	58.7	60	70	62	372	60.7	70	80	64	376
												11725	16	1	38.5	59.9	60	70	62	372	62.4	70	80	64	376
												12525	24.8	1	59.7	86.4	90	90	79	372	88.9	90	90	82	376
												13225	32	1	77	108	110	110	99	372	110.5	125	125	102	376
												14225	42.4	2	102	139.3	150	150	128	372	141.8	150	150	130	376
	460-3-60	8.2	66.1	13	8.2	66.1	13	2.9	4.7	0.5		None	-	-	-	26.1	30	30	28	184	27.1	30	30	29	186
												11746	16.5	1	19.8	30.6	35	35	28	184	31.9	35	35	29	186
												12846	27.8	1	33.4	47.6	50	50	44	184	48.9	50	50	45	186
												13346	33	1	39.7	55.5	60	60	51	184	56.8	60	60	52	186
												14246	41.7	2	50.2	68.6	70	70	63	184	69.9	70	70	64	186
	575-3-60	6.6	55.3	10	6.6	55.3	10	2.2	4.3	0.4		None	-	-	-	21.4	25	25	23	162	22.2	25	25	24	164
												11758	17	1	16.4	25.9	30	30	24	162	26.9	30	30	25	164
												13458	34	1	32.7	46.3	50	50	43	162	47.3	50	50	43	164

1. Minimum Circuit Ampacity.
2. Dual Element, Time Delay Type.
3. HACR type per NEC.
4. Non-fused Disconnect, Verify on the unit nameplate that the disconnect is properly sized for the application. Units with field installed electric heat kits may exceed the factory installed disconnect amperage rating.

ZX08-14 Medium Static Indoor Blower - With Powered Convenience Outlet

Size (Tons)	Nominal Unit Voltage	Compressor 1			Compressor 2			OD Fan Motors (each)	Supply Blower Motor	Pwr Exh Motor	Pwr Conv Outlet	Electric Heat Field Installed Kit 2EK045*				MCA[1] (Amps)	Min Fuse[2]/ Breaker[3] Size (Amps)	Max Fuse[2]/ Breaker[3] Size (Amps)	Min Discon-nect Rating[4]		MCA[1] w/Pwr Exh (Amps)	Min Fuse[2]/ Breaker[3] Size w/ Pwr Exh (Amps)	Max Fuse[2]/ Breaker[3] Size w/ Pwr Exh (Amps)	Min Discon-nect Rating[4]/ Pwr Exh	
		RLA	LRA	MCC	RLA	LRA	MCC					Model	kW	Stages	Amps				FLA	LRA				FLA	LRA
With VFD																									
08 (7.5)	208-3-60	13.6	83.1	21	13.6	83.1	21	2.3	8.9	1.1	8.6	None	-	-	-	48.4	50	60	52	267	50.6	60	60	54	277
												11725	12	1	33.3	58.1	60	60	53	267	60.9	70	70	56	277
												12525	18.6	1	51.6	81	90	90	75	267	83.8	90	90	77	277
												13225	24	1	66.6	99.8	100	100	92	267	102.5	110	110	94	277
												14225	31.8	2	88.3	126.9	150	150	117	267	129.6	150	150	119	277
	230-3-60	13.6	83.1	21	13.6	83.1	21	2.3	8.2	1	8.6	None	-	-	-	47.7	50	60	51	270	49.7	50	60	53	264
												11725	16	1	38.5	63.8	70	70	59	270	66.3	70	70	61	264
												12525	24.8	1	59.7	90.3	100	100	83	270	92.8	100	100	85	264
												13225	32	1	77	111.9	125	125	103	270	114.4	125	125	105	264
												14225	42.4	2	102	143.1	150	150	132	270	145.6	150	150	134	264
	460-3-60	6.1	41	10	6.1	41	10	1.3	4.1	0.5	8.6	None	-	-	-	22.6	25	25	24	130	23.6	25	25	25	127
												11746	16.5	1	19.8	32.6	35	35	30	130	33.8	35	35	31	127
												12846	27.8	1	33.4	49.6	50	50	46	130	50.8	60	60	47	127
												13346	33	1	39.7	57.4	60	60	53	130	58.7	60	60	54	127
												14246	41.7	2	50.2	70.6	80	80	65	130	71.8	80	80	66	127
	575-3-60	4.2	33	7	4.2	33	7	1.1	3.2	0.4	8.6	None	-	-	-	16.6	20	20	18	103	17.4	20	20	19	100
												11758	17	1	16.4	26.7	30	30	25	103	27.7	30	30	25	100
												13458	34	1	32.7	47	50	50	43	103	48	50	50	44	100
09 (8.5)	208-3-60	14.5	98	23	14.5	98	23	2.3	7	1.1	8.6	None	-	-	-	48.5	50	60	52	280	50.7	60	60	54	290
												11725	12	1	33.3	55.8	60	60	52	280	58.5	60	60	54	290
												12525	18.6	1	51.6	78.6	80	80	72	280	81.4	90	90	75	290
												13225	24	1	66.6	97.4	100	100	90	280	100.1	110	110	92	290
												14225	31.8	2	88.3	124.5	125	125	115	280	127.3	150	150	117	290
	230-3-60	14.5	98	23	14.5	98	23	2.3	7.2	1	8.6	None	-	-	-	48.7	50	60	52	282	50.7	60	60	54	277
												11725	16	1	38.5	62.5	70	70	58	282	65	70	70	60	277
												12525	24.8	1	59.7	89	90	90	82	282	91.5	100	100	84	277
												13225	32	1	77	110.6	125	125	102	282	113.1	125	125	104	277
												14225	42.4	2	102	141.9	150	150	131	282	144.4	150	150	133	277
	460-3-60	6.3	55	10	6.3	55	10	1.3	3.6	0.5	8.6	None	-	-	-	22.6	25	25	24	155	23.6	25	25	25	151
												11746	16.5	1	19.8	31.9	35	35	29	155	33.2	35	35	31	151
												12846	27.8	1	33.4	48.9	50	50	45	155	50.2	60	60	46	151
												13346	33	1	39.7	56.8	60	60	52	155	58.1	60	60	53	151
												14246	41.7	2	50.2	69.9	70	70	64	155	71.2	80	80	65	151
	575-3-60	6	41	9	6	41	9	1.1	2.5	0.4	8.6	None	-	-	-	19.9	20	25	21	111	20.7	25	25	22	108
												11758	17	1	16.4	25.8	30	30	24	111	26.8	30	30	25	108
												13458	34	1	32.7	46.2	50	50	42	111	47.2	50	50	43	108
12 (10)	208-3-60	16	110	25	15.6	110	24	2.3	9.9	1.1	8.6	None	-	-	-	54.4	60	70	58	316	56.6	60	70	60	326
												11725	12	1	33.3	59.4	60	70	58	316	62.1	70	70	60	326
												12525	18.6	1	51.6	82.3	90	90	76	316	85	90	90	78	326
												13225	24	1	66.6	101	110	110	93	316	103.8	110	110	95	326
												14225	31.8	2	88.3	128.1	150	150	118	316	130.9	150	150	120	326
	230-3-60	16	110	25	15.6	110	24	2.3	9.4	1	8.6	None	-	-	-	53.9	60	60	57	325	55.9	60	70	60	320
												11725	16	1	38.5	65.3	70	70	60	325	67.8	70	70	62	320
												12525	24.8	1	59.7	91.8	100	100	84	325	94.3	100	100	87	320
												13225	32	1	77	113.4	125	125	104	325	115.9	125	125	107	320
												14225	42.4	2	102	144.6	150	150	133	325	147.1	150	150	135	320
	460-3-60	7.8	52	12	7.8	52	12	1.3	4.7	0.5	8.6	None	-	-	-	27.1	30	30	29	158	28.1	30	30	30	154
												11746	16.5	1	19.8	33.3	35	35	31	158	34.6	35	35	32	154
												12846	27.8	1	33.4	50.3	60	60	46	158	51.6	60	60	47	154
												13346	33	1	39.7	58.2	60	60	54	158	59.4	60	60	55	154
												14246	41.7	2	50.2	71.3	80	80	66	158	72.6	80	80	67	154
	575-3-60	5.7	38.9	9	5.8	38.9	9	1.1	4.3	0.4	8.6	None	-	-	-	21.2	25	25	23	129	22	25	25	24	126
												11758	17	1	16.4	28	30	30	26	129	29	30	30	27	126
												13458	34	1	32.7	48.4	50	50	45	129	49.4	50	50	45	126

ZX08-14 Medium Static Indoor Blower - With Powered Convenience Outlet (Continued)

Size (Tons)	Nominal Unit Voltage	Compressor 1			Compressor 2			OD Fan Motors (each)	Supply Blower Motor	Pwr Exh Motor	Pwr Conv Outlet	Electric Heat Field Installed Kit 2EK045*				MCA[1] (Amps)	Min Fuse[2]/ Breaker[3] Size (Amps)	Max Fuse[2]/ Breaker[3] Size (Amps)	Min Discon-nect Rating[4]		MCA[1] w/Pwr Exh (Amps)	Min Fuse[2]/ Breaker[3] Size w/ Pwr Exh (Amps)	Max Fuse[2]/ Breaker[3] Size w/ Pwr Exh (Amps)	Min Discon-nect Rating[4]/ Pwr Exh	
		RLA	LRA	MCC	RLA	LRA	MCC					Model	kW	Stages	Amps				FLA	LRA				FLA	LRA
14 (12.5)	208-3-60	19.6	136	31	19.6	136	31	5.8	9.9	1.1	8.6	None	-	-	-	64.1	70	80	68	371	66.3	70	80	71	381
												11725	12	1	33.3	64.1	70	80	68	371	66.3	70	80	71	381
												12525	18.6	1	51.6	82.3	90	90	76	371	85	90	90	78	381
												13225	24	1	66.6	101	110	110	93	371	103.8	110	110	95	381
												14225	31.8	2	88.3	128.1	150	150	118	371	130.9	150	150	120	381
	230-3-60	19.6	136	31	19.6	136	31	5.2	9.4	1	8.6	None	-	-	-	63	70	80	67	376	65	70	80	69	381
												11725	16	1	38.5	65.3	70	80	67	376	67.8	70	80	69	381
												12525	24.8	1	59.7	91.8	100	100	84	376	94.3	100	100	87	381
												13225	32	1	77	113.4	125	125	104	376	115.9	125	125	107	381
												14225	42.4	2	102	144.6	150	150	133	376	147.1	150	150	135	381
	460-3-60	8.2	66.1	13	8.2	66.1	13	2.9	4.7	0.5	8.6	None	-	-	-	28.3	30	35	30	186	29.3	30	35	31	188
												11746	16.5	1	19.8	33.3	35	35	31	186	34.6	35	35	32	188
												12846	27.8	1	33.4	50.3	60	60	46	186	51.6	60	60	47	188
												13346	33	1	39.7	58.2	60	60	54	186	59.4	60	60	55	188
												14246	41.7	2	50.2	71.3	80	80	66	186	72.6	80	80	67	188
	575-3-60	6.6	55.3	10	6.6	55.3	10	2.2	4.3	0.4	8.6	None	-	-	-	23.1	25	25	25	164	23.9	25	25	26	165
												11758	17	1	16.4	28	30	30	26	164	29	30	30	27	165
												13458	34	1	32.7	48.4	50	50	45	164	49.4	50	50	45	165

1. Minimum Circuit Ampacity.
2. Dual Element, Time Delay Type.
3. HACR type per NEC.
4. Non-fused Disconnect, Verify on the unit nameplate that the disconnect is properly sized for the application. Units with field installed electric heat kits may exceed the factory installed disconnect amperage rating.

ZX08-14 Hi Static Indoor Blower - Without Powered Convenience Outlet

Size (Tons)	Nominal Unit Voltage	Compressor 1			Compressor 2			OD Fan Motors (each)	Supply Blower Motor	Pwr Exh Motor	Pwr Conv Outlet	Electric Heat Field Installed Kit 2EK045*				MCA[1] (Amps)	Min Fuse[2]/ Breaker[3] Size (Amps)	Max Fuse[2]/ Breaker[3] Size (Amps)	Min Discon-nect Rating[4]		MCA[1] w/Pwr Exh (Amps)	Min Fuse[2]/ Breaker[3] Size w/ Pwr Exh (Amps)	Max Fuse[2]/ Breaker[3] Size w/ Pwr Exh (Amps)	Min Discon-nect Rating[4]/ Pwr Exh	
		RLA	LRA	MCC	RLA	LRA	MCC					Model	kW	Stages	Amps				FLA	LRA				FLA	LRA
With VFD																									
08 (7.5)	208-3-60	13.6	83.1	21	13.6	83.1	21	2.3	9.9	1.1		None	-	-	-	45.1	50	50	48	258	47.3	50	50	50	268
												11725	12	1	33.3	54	60	60	50	258	56.8	60	60	52	268
												12525	18.6	1	51.6	76.9	80	80	71	258	79.6	80	80	73	268
												13225	24	1	66.6	95.6	100	100	88	258	98.4	100	100	91	268
												14225	31.8	2	88.3	122.8	125	125	113	258	125.5	150	150	115	268
	230-3-60	13.6	83.1	21	13.6	83.1	21	2.3	9.4	1		None	-	-	-	44.6	45	50	47	267	46.6	50	60	50	261
												11725	16	1	38.5	59.9	60	60	55	267	62.4	70	70	57	261
												12525	24.8	1	59.7	86.4	90	90	79	267	88.9	90	90	82	261
												13225	32	1	77	108	110	110	99	267	110.5	125	125	102	261
												14225	42.4	2	102	139.3	150	150	128	267	141.8	150	150	130	261
	460-3-60	6.1	41	10	6.1	41	10	1.3	4.7	0.5		None	-	-	-	21	25	25	22	134	22	25	25	24	130
												11746	16.5	1	19.8	30.6	35	35	28	134	31.9	35	35	29	130
												12846	27.8	1	33.4	47.6	50	50	44	134	48.9	50	50	45	130
												13346	33	1	39.7	55.5	60	60	51	134	56.8	60	60	52	130
												14246	41.7	2	50.2	68.6	70	70	63	134	69.9	70	70	64	130
	575-3-60	4.2	33	7	4.2	33	7	1.1	4.3	0.4		None	-	-	-	16	20	20	17	115	16.8	20	20	18	113
												11758	17	1	16.4	25.9	30	30	24	115	26.9	30	30	25	113
												13458	34	1	32.7	46.3	50	50	43	115	47.3	50	50	43	113
09 (8.5)	208-3-60	14.5	98	23	14.5	98	23	2.3	9.9	1.1		None	-	-	-	47.1	50	60	50	288	49.3	50	60	53	298
												11725	12	1	33.3	54	60	60	50	288	56.8	60	60	53	298
												12525	18.6	1	51.6	76.9	80	80	71	288	79.6	80	80	73	298
												13225	24	1	66.6	95.6	100	100	88	288	98.4	100	100	91	298
												14225	31.8	2	88.3	122.8	125	125	113	288	125.5	150	150	115	298
	230-3-60	14.5	98	23	14.5	98	23	2.3	9.4	1		None	-	-	-	46.6	50	60	49	297	48.6	50	60	52	291
												11725	16	1	38.5	59.9	60	60	55	297	62.4	70	70	57	291
												12525	24.8	1	59.7	86.4	90	90	79	297	88.9	90	90	82	291
												13225	32	1	77	108	110	110	99	297	110.5	125	125	102	291
												14225	42.4	2	102	139.3	150	150	128	297	141.8	150	150	130	291
	460-3-60	6.3	55	10	6.3	55	10	1.3	4.7	0.5		None	-	-	-	21.5	25	25	23	162	22.5	25	25	24	158
												11746	16.5	1	19.8	30.6	35	35	28	162	31.9	35	35	29	158
												12846	27.8	1	33.4	47.6	50	50	44	162	48.9	50	50	45	158
												13346	33	1	39.7	55.5	60	60	51	162	56.8	60	60	52	158
												14246	41.7	2	50.2	68.6	70	70	63	162	69.9	70	70	64	158
	575-3-60	6	41	9	6	41	9	1.1	4.3	0.4		None	-	-	-	20	25	25	21	131	20.8	25	25	22	129
												11758	17	1	16.4	25.9	30	30	24	131	26.9	30	30	25	129
												13458	34	1	32.7	46.3	50	50	43	131	47.3	50	50	43	129
12 (10)	208-3-60	16	110	25	15.6	110	24	2.3	13.5	1.1		None	-	-	-	53.7	60	60	57	342	55.9	60	70	60	352
												11725	12	1	33.3	58.5	60	60	57	342	61.3	70	70	60	352
												12525	18.6	1	51.6	81.4	90	90	75	342	84.1	90	90	77	352
												13225	24	1	66.6	100.1	110	110	92	342	102.9	110	110	95	352
												14225	31.8	2	88.3	127.3	150	150	117	342	130	150	150	120	352
	230-3-60	16	110	25	15.6	110	24	2.3	13.4	1		None	-	-	-	53.6	60	60	57	342	55.6	60	70	59	337
												11725	16	1	38.5	64.9	70	70	60	342	67.4	70	70	62	337
												12525	24.8	1	59.7	91.4	100	100	84	342	93.9	100	100	86	337
												13225	32	1	77	113	125	125	104	342	115.5	125	125	106	337
												14225	42.4	2	102	144.3	150	150	133	342	146.8	150	150	135	337
	460-3-60	7.8	52	12	7.8	52	12	1.3	6.7	0.5		None	-	-	-	26.9	30	30	29	167	27.9	30	30	30	163
												11746	16.5	1	19.8	33.1	35	35	30	167	34.4	35	35	32	163
												12846	27.8	1	33.4	50.1	60	60	46	167	51.4	60	60	47	163
												13346	33	1	39.7	58	60	60	53	167	59.3	60	60	55	163
												14246	41.7	2	50.2	71.1	80	80	65	167	72.4	80	80	67	163
	575-3-60	5.7	38.9	9	5.8	38.9	9	1.1	5.4	0.4		None	-	-	-	20.6	25	25	22	127	21.4	25	25	23	124
												11758	17	1	16.4	27.3	30	30	25	127	28.3	30	30	26	124
												13458	34	1	32.7	47.6	50	50	44	127	48.6	50	50	45	124

ZX08-14 Hi Static Indoor Blower - Without Powered Convenience Outlet (Continued)

Size (Tons)	Nominal Unit Voltage	Compressor 1			Compressor 2			OD Fan Motors (each)	Supply Blower Motor	Pwr Exh Motor	Pwr Conv Outlet	Electric Heat Field Installed Kit 2EK045*				MCA[1] (Amps)	Min Fuse[2]/ Breaker[3] Size (Amps)	Max Fuse[2]/ Breaker[3] Size (Amps)	Min Discon-nect Rating[4]		MCA[1] w/Pwr Exh (Amps)	Min Fuse[2]/ Breaker[3] Size w/ Pwr Exh (Amps)	Max Fuse[2]/ Breaker[3] Size w/ Pwr Exh (Amps)	Min Discon-nect Rating[4]/ Pwr Exh	
		RLA	LRA	MCC	RLA	LRA	MCC					Model	kW	Stages	Amps				FLA	LRA				FLA	LRA
14 (12.5)	208-3-60	19.6	136	31	19.6	136	31	5.8	13.5	1.1		None	-	-	-	63.4	70	80	67	397	65.6	70	80	70	407
												11725	12	1	33.3	63.4	70	80	67	397	65.6	70	80	70	407
												12525	18.6	1	51.6	81.4	90	90	75	397	84.1	90	90	77	407
												13225	24	1	66.6	100.1	110	110	92	397	102.9	110	110	95	407
												14225	31.8	2	88.3	127.3	150	150	117	397	130	150	150	120	407
	230-3-60	19.6	136	31	19.6	136	31	5.2	13.4	1		None	-	-	-	62.7	70	80	66	393	64.7	70	80	69	398
												11725	16	1	38.5	64.9	70	80	66	393	67.4	70	80	69	398
												12525	24.8	1	59.7	91.4	100	100	84	393	93.9	100	100	86	398
												13225	32	1	77	113	125	125	104	393	115.5	125	125	106	398
												14225	42.4	2	102	144.3	150	150	133	393	146.8	150	150	135	398
	460-3-60	8.2	66.1	13	8.2	66.1	13	2.9	6.7	0.5		None	-	-	-	28.1	30	35	30	194	29.1	30	35	31	196
												11746	16.5	1	19.8	33.1	35	35	30	194	34.4	35	35	32	196
												12846	27.8	1	33.4	50.1	60	60	46	194	51.4	60	60	47	196
												13346	33	1	39.7	58	60	60	53	194	59.3	60	60	55	196
												14246	41.7	2	50.2	71.1	80	80	65	194	72.4	80	80	67	196
	575-3-60	6.6	55.3	10	6.6	55.3	10	2.2	5.4	0.4		None	-	-	-	22.5	25	25	24	162	23.3	25	25	25	164
												11758	17	1	16.4	27.3	30	30	25	162	28.3	30	30	26	164
												13458	34	1	32.7	47.6	50	50	44	162	48.6	50	50	45	164

1. Minimum Circuit Ampacity.
2. Dual Element, Time Delay Type.
3. HACR type per NEC.
4. Non-fused Disconnect, Verify on the unit nameplate that the disconnect is properly sized for the application. Units with field installed electric heat kits may exceed the factory installed disconnect amperage rating.

ZX08-14 Hi Static Indoor Blower - With Powered Convenience Outlet

Size (Tons)	Nominal Unit Voltage	Compressor 1			Compressor 2			OD Fan Motors (each)	Supply Blower Motor	Pwr Exh Motor	Pwr Conv Outlet	Electric Heat Field Installed Kit 2EK045*				MCA[1] (Amps)	Min Fuse[2]/ Breaker[3] Size (Amps)	Max Fuse[2]/ Breaker[3] Size (Amps)	Min Discon-nect Rating[4]		MCA[1] w/Pwr Exh (Amps)	Min Fuse[2]/ Breaker[3] Size w/ Pwr Exh (Amps)	Max Fuse[2]/ Breaker[3] Size w/ Pwr Exh (Amps)	Min Discon-nect Rating[4]/ Pwr Exh	
		RLA	LRA	MCC	RLA	LRA	MCC					Model	kW	Stages	Amps				FLA	LRA				FLA	LRA
With VFD																									
08 (7.5)	208-3-60	13.6	83.1	21	13.6	83.1	21	2.3	9.9	1.1	8.6	None	-	-	-	49.4	50	60	53	262	51.6	60	60	55	272
												11725	12	1	33.3	59.4	60	60	55	262	62.1	70	70	57	272
												12525	18.6	1	51.6	82.3	90	90	76	262	85	90	90	78	272
												13225	24	1	66.6	101	110	110	93	262	103.8	110	110	95	272
												14225	31.8	2	88.3	128.1	150	150	118	262	130.9	150	150	120	272
	230-3-60	13.6	83.1	21	13.6	83.1	21	2.3	9.4	1	8.6	None	-	-	-	48.9	50	60	52	271	50.9	60	60	55	266
												11725	16	1	38.5	65.3	70	70	60	271	67.8	70	70	62	266
												12525	24.8	1	59.7	91.8	100	100	84	271	94.3	100	100	87	266
												13225	32	1	77	113.4	125	125	104	271	115.9	125	125	107	266
												14225	42.4	2	102	144.6	150	150	133	271	147.1	150	150	135	266
	460-3-60	6.1	41	10	6.1	41	10	1.3	4.7	0.5	8.6	None	-	-	-	23.2	25	25	25	136	24.2	25	25	26	132
												11746	16.5	1	19.8	33.3	35	35	31	136	34.6	35	35	32	132
												12846	27.8	1	33.4	50.3	60	60	46	136	51.6	60	60	47	132
												13346	33	1	39.7	58.2	60	60	54	136	59.4	60	60	55	132
												14246	41.7	2	50.2	71.3	80	80	66	136	72.6	80	80	67	132
	575-3-60	4.2	33	7	4.2	33	7	1.1	4.3	0.4	8.6	None	-	-	-	17.7	20	20	19	117	18.5	20	20	20	114
												11758	17	1	16.4	28	30	30	26	117	29	30	30	27	114
												13458	34	1	32.7	48.4	50	50	45	117	49.4	50	50	45	114
09 (8.5)	208-3-60	14.5	98	23	14.5	98	23	2.3	9.9	1.1	8.6	None	-	-	-	51.4	60	60	55	292	53.6	60	60	58	302
												11725	12	1	33.3	59.4	60	60	55	292	62.1	70	70	58	302
												12525	18.6	1	51.6	82.3	90	90	76	292	85	90	90	78	302
												13225	24	1	66.6	101	110	110	93	292	103.8	110	110	95	302
												14225	31.8	2	88.3	128.1	150	150	118	292	130.9	150	150	120	302
	230-3-60	14.5	98	23	14.5	98	23	2.3	9.4	1	8.6	None	-	-	-	50.9	60	60	54	301	52.9	60	60	57	296
												11725	16	1	38.5	65.3	70	70	60	301	67.8	70	70	62	296
												12525	24.8	1	59.7	91.8	100	100	84	301	94.3	100	100	87	296
												13225	32	1	77	113.4	125	125	104	301	115.9	125	125	107	296
												14225	42.4	2	102	144.6	150	150	133	301	147.1	150	150	135	296
	460-3-60	6.3	55	10	6.3	55	10	1.3	4.7	0.5	8.6	None	-	-	-	23.7	25	25	25	164	24.7	25	25	27	160
												11746	16.5	1	19.8	33.3	35	35	31	164	34.6	35	35	32	160
												12846	27.8	1	33.4	50.3	60	60	46	164	51.6	60	60	47	160
												13346	33	1	39.7	58.2	60	60	54	164	59.4	60	60	55	160
												14246	41.7	2	50.2	71.3	80	80	66	164	72.6	80	80	67	160
	575-3-60	6	41	9	6	41	9	1.1	4.3	0.4	8.6	None	-	-	-	21.7	25	25	23	133	22.5	25	25	24	130
												11758	17	1	16.4	28	30	30	26	133	29	30	30	27	130
												13458	34	1	32.7	48.4	50	50	45	133	49.4	50	50	45	130
12 (10)	208-3-60	16	110	25	15.6	110	24	2.3	13.5	1.1	8.6	None	-	-	-	58	60	70	62	346	60.2	70	70	65	356
												11725	12	1	33.3	63.9	70	70	62	346	66.6	70	70	65	356
												12525	18.6	1	51.6	86.8	90	90	80	346	89.5	90	90	82	356
												13225	24	1	66.6	105.5	110	110	97	346	108.3	110	110	100	356
												14225	31.8	2	88.3	132.6	150	150	122	346	135.4	150	150	125	356
	230-3-60	16	110	25	15.6	110	24	2.3	13.4	1	8.6	None	-	-	-	57.9	60	70	62	346	59.9	60	70	64	341
												11725	16	1	38.5	70.3	80	80	65	346	72.8	80	80	67	341
												12525	24.8	1	59.7	96.8	100	100	89	346	99.3	100	100	91	341
												13225	32	1	77	118.4	125	125	109	346	120.9	125	125	111	341
												14225	42.4	2	102	149.6	150	150	138	346	152.1	175	175	140	341
	460-3-60	7.8	52	12	7.8	52	12	1.3	6.7	0.5	8.6	None	-	-	-	29.1	30	35	31	169	30.1	35	35	32	165
												11746	16.5	1	19.8	35.8	40	40	33	169	37.1	40	40	34	165
												12846	27.8	1	33.4	52.8	60	60	49	169	54.1	60	60	50	165
												13346	33	1	39.7	60.7	70	70	56	169	61.9	70	70	57	165
												14246	41.7	2	50.2	73.8	80	80	68	169	75.1	80	80	69	165
	575-3-60	5.7	38.9	9	5.8	38.9	9	1.1	5.4	0.4	8.6	None	-	-	-	22.3	25	25	24	129	23.1	25	25	25	126
												11758	17	1	16.4	29.4	30	30	27	129	30.4	35	35	28	126
												13458	34	1	32.7	49.8	50	50	46	129	50.8	60	60	47	126

ZX08-14 Hi Static Indoor Blower - With Powered Convenience Outlet (Continued)

Size (Tons)	Nominal Unit Voltage	Compressor 1			Compressor 2			OD Fan Motors (each)	Supply Blower Motor	Pwr Exh Motor	Pwr Conv Outlet	Electric Heat Field Installed Kit 2EK045*				MCA[1] (Amps)	Min Fuse[2]/ Breaker[3] Size (Amps)	Max Fuse[2]/ Breaker[3] Size (Amps)	Min Discon-nect Rating[4]		MCA[1] w/Pwr Exh (Amps)	Min Fuse[2]/ Breaker[3] Size w/ Pwr Exh (Amps)	Max Fuse[2]/ Breaker[3] Size w/ Pwr Exh (Amps)	Min Discon-nect Rating[4]/ Pwr Exh	
		RLA	LRA	MCC	RLA	LRA	MCC					Model	kW	Stages	Amps				FLA	LRA				FLA	LRA
14 (12.5)	208-3-60	19.6	136	31	19.6	136	31	5.8	13.5	1.1	8.6	None	-	-	-	67.7	70	80	72	401	69.9	70	80	75	411
												11725	12	1	33.3	67.7	70	80	72	401	69.9	70	80	75	411
												12525	18.6	1	51.6	86.8	90	90	80	401	89.5	90	90	82	411
												13225	24	1	66.6	105.5	110	110	97	401	108.3	110	110	100	411
												14225	31.8	2	88.3	132.6	150	150	122	401	135.4	150	150	125	411
	230-3-60	19.6	136	31	19.6	136	31	5.2	13.4	1	8.6	None	-	-	-	67	70	80	71	397	69	70	80	74	402
												11725	16	1	38.5	70.3	80	80	71	397	72.8	80	80	74	402
												12525	24.8	1	59.7	96.8	100	100	89	397	99.3	100	100	91	402
												13225	32	1	77	118.4	125	125	109	397	120.9	125	125	111	402
												14225	42.4	2	102	149.6	150	150	138	397	152.1	175	175	140	402
	460-3-60	8.2	66.1	13	8.2	66.1	13	2.9	6.7	0.5	8.6	None	-	-	-	30.3	35	35	32	196	31.3	35	35	34	199
												11746	16.5	1	19.8	35.8	40	40	33	196	37.1	40	40	34	199
												12846	27.8	1	33.4	52.8	60	60	49	196	54.1	60	60	50	199
												13346	33	1	39.7	60.7	70	70	56	196	61.9	70	70	57	199
												14246	41.7	2	50.2	73.8	80	80	68	196	75.1	80	80	69	199
	575-3-60	6.6	55.3	10	6.6	55.3	10	2.2	5.4	0.4	8.6	None	-	-	-	24.2	25	30	26	164	25	25	30	27	165
												11758	17	1	16.4	29.4	30	30	27	164	30.4	35	35	28	165
												13458	34	1	32.7	49.8	50	50	46	164	50.8	60	60	47	165

1. Minimum Circuit Ampacity.
2. Dual Element, Time Delay Type.
3. HACR type per NEC.
4. Non-fused Disconnect, Verify on the unit nameplate that the disconnect is properly sized for the application. Units with field installed electric heat kits may exceed the factory installed disconnect amperage rating.

Table 8: Physical Data

ZX08 Physical Data

Component		Models			
		ZXG08			ZXE08
Nominal Tonnage		7.5			7.5
AHRI COOLING PERFORMANCE	Gross Capacity @ AHRI A point (Btu)	94000			94000
	AHRI net capacity (Btu)	85000			85000
	EER	11			11.2
	SEER	-			-
	IEER IntelliSpeed	13.4			13.5
	Nominal CFM	2900			2900
	System power (KW)	6.6			6.6
	Refrigerant type	R-410A			R-410A
	Refrigerant charge (lb-oz)				
	System 1	4-8			4-8
	System 2	4-12			4-12
AHRI HEATING PERFORMANCE	Heating Option	D	E	F	-
	Heating model	Low	Med	High	-
	1st. Stage Heat input (K Btu)	90	125	176	-
	2nd. Stage Heat input (K Btu)	125	180	220	-
	1st. Stage Heat output (K Btu)	72	100	141	-
	2nd. Stage Heat output (K Btu)	100	144	176	-
	AFUE %				-
	Steady state efficiency (%)	80	80	80	-
	No. burners	3	4	5	-
	No. stages	2	2	2	-
	Temperature Rise Range (ºF)	25-41	36-59	43-72	-
	Gas Limit Setting (ºF)	140	150	140	-
	Gas piping connection (in.)	3/4	3/4	3/4	-
DIMENSIONS (inches)	Length	87.1			87.1
	Width	61.7			61.7
	Height	40.6			40.6
OPERATING WT. (lbs.)		893			791
COMPRESSORS	Type	Scroll			Scroll
	Quantity	2			2
	Unit Capacity Steps (%)	50/100			50/100
CONDENSER COIL DATA	Face area (Sq. Ft.)	21.1			21.1
	Rows	1			1
	Fins per inch	23			23
	Tube diameter (in./MM)	1/25			1/25
	Circuitry Type	2-pass Microchannel			2-pass Microchannel
EVAPORATOR COIL DATA	Face area (Sq. Ft.)	8.9			8.9
	Rows	3			3
	Fins per inch	15			15
	Tube diameter	0.375			0.375
	Circuitry Type	Intertwined			Intertwined
	Refrigerant control	Orifice			Orifice

ZX08 Physical Data (Continued)

Component		Models					
		ZXG08			ZXE08		
Nominal Tonnage		7.5			7.5		
CONDENSER FAN DATA	Quantity of fans	2			2		
	Fan diameter (Inch)	22			22		
	Type	Prop			Prop		
	Drive type	Direct			Direct		
	Quantity of motors	2			2		
	Motor HP each	1/2			1/2		
	No. speeds	1			1		
	RPM	1085			1085		
	Nominal total CFM	7600			7600		
EVAP FAN DATA BELT DRIVE	Airflow Option	A	B	C	A	B	C
	Quantity	1	1	1	1	1	1
	Fan Size (Inch)	15 X 15	15 X 15	15 X 15	15 X 15	15 X 15	15 X 15
	Type	Centrifugal			Centrifugal		
	Motor Sheave	1VL34	1VL44	1VP50	1VL34	1VL44	1VP50
	Blower Sheave	AK74	AK74	AK74	AK74	AK74	AK74
	Belt	A47	A48	A48	A47	A48	A48
	Motor Max Bhp, 3 Phase	2.4	2.9	3.7	2.4	2.9	3.7
	RPM	1725	1725	1725	1725	1725	1725
	Frame size	56Y	56Y	56HZ	56Y	56Y	56HZ
FILTERS	Quantity - Size	4 - (16 x 20 x 2)[1]			4 - (16 x 20 x 2)[1]		

1. 2 in. Throwaway, Standard, MERV 4 (Minimum Efficiency Reporting Value).

ZX09 Physical Data

Component		Models			
		ZXG09			ZXE09
Nominal Tonnage		8.5			8.5
AHRI COOLING PERFORMANCE	Gross Capacity @ AHRI A point (Btu)	105600			105600
	AHRI net capacity (Btu)	99000			99000
	EER	11			11.2
	SEER	-			-
	IEER IntelliSpeed	13.0			13.3
	Nominal CFM	3300			3300
	System power (KW)	7.70			7.70
	Refrigerant type	R-410A			R-410A
	Refrigerant charge (lb-oz)				
	System 1	5-4			5-4
	System 2	5-4			5-4
AHRI HEATING PERFORMANCE	Heating Option	D	E	F	-
	Heating model	Low	Med	High	-
	1st. Stage Heat input (K Btu)	90	125	176	-
	2nd. Stage Heat input (K Btu)	125	180	220	-
	1st. Stage Heat output (K Btu)	72	100	141	-
	2nd. Stage Heat output (K Btu)	100	144	176	-
	AFUE %				-
	Steady state efficiency (%)	80	80	80	-
	No. burners	3	4	5	-
	No. stages	2	2	2	-
	Temperature Rise Range (ºF)	22-36	31-52	38-64	-
	Gas Limit Setting (ºF)	140	150	140	-
	Gas piping connection (in.)	3/4	3/4	3/4	-
DIMENSIONS (inches)	Length	87.2			87.2
	Width	61.7			61.7
	Height	48.6			48.6
OPERATING WT. (lbs.)		954			852
COMPRESSORS	Type	Scroll			Scroll
	Quantity	2			2
	Unit Capacity Steps (%)	50/100			50/100
CONDENSER COIL DATA	Face area (Sq. Ft.)	25.5			25.5
	Rows	1			1
	Fins per inch	23			23
	Tube diameter (in./MM)	1/25			1/25
	Circuitry Type	2-pass Microchannel			2-pass Microchannel
EVAPORATOR COIL DATA	Face area (Sq. Ft.)	11.1			11.1
	Rows	3			3
	Fins per inch	15			15
	Tube diameter	0.375			0.375
	Circuitry Type	Intertwined			Intertwined
	Refrigerant control	Orifice			Orifice

ZX09 Physical Data (Continued)

Component		Models					
		ZXG09			ZXE09		
Nominal Tonnage		8.5			8.5		
CONDENSER FAN DATA	Quantity of fans	2			2		
	Fan diameter (Inch)	22			22		
	Type	Prop			Prop		
	Drive type	Direct			Direct		
	Quantity of motors	2			2		
	Motor HP each	1/2			1/2		
	No. speeds	1			1		
	RPM	1085			1085		
	Nominal total CFM	8600			8600		
EVAP FAN DATA BELT DRIVE	Airflow Option	A	B	C	A	B	C
	Quantity	1	1	1	1	1	1
	Fan Size (Inch)	15 x 15	15 x 15	15 x 15	15 x 15	15 x 15	15 x 15
	Type	Centrifugal			Centrifugal		
	Motor Sheave	1VL34	1VL44	1VP50	1VL34	1VL44	1VP50
	Blower Sheave	AK74	AK74	AK74	AK74	AK74	AK74
	Belt	A47	A48	A50	A47	A48	A50
	Motor Max Bhp, 3 Phase	2.4	2.4	3.7	2.4	2.4	3.7
	RPM	1725	1725	1725	1725	1725	1725
	Frame size	56Y	56Y	56HZ	56Y	56Y	56HZ
FILTERS	Quantity - Size	4 - (20 x 20 x 2)[1]			4 - (20 x 20 x 2)[1]		

1. 2 in. Throwaway, Standard, MERV 4 (Minimum Efficiency Reporting Value).

ZX12 Physical Data

Component		Models			
		ZXG12			ZXE12
Nominal Tonnage		10			10
AHRI COOLING PERFORMANCE	Gross Capacity @ AHRI A point (Btu)	125600			125600
	AHRI net capacity (Btu)	116000			116000
	EER	11			11.2
	SEER	-			-
	IEER IntelliSpeed	14.4			14.6
	Nominal CFM	3400			3400
	System power (KW)	9.2			9.2
	Refrigerant type	R-410A			R-410A
	Refrigerant charge (lb-oz)				
	System 1	5-12			5-12
	System 2	5-12			5-12
AHRI HEATING PERFORMANCE	Heating Option	D	E	F	-
	Heating model	Low	Med	High	-
	1st. Stage Heat input (K Btu)	125	176	200	-
	2nd. Stage Heat input (K Btu)	180	220	250	-
	1st. Stage Heat output (K Btu)	100	141	160	-
	2nd. Stage Heat output (K Btu)	144	176	200	-
	AFUE %				-
	Steady state efficiency (%)	80	80	80	-
	No. burners	4	5	5	-
	No. stages	2	2	2	-
	Temperature Rise Range (ºF)	27-44	33-54	37-62	-
	Gas Limit Setting (ºF)	150	140	160	-
	Gas piping connection (in.)	3/4	3/4	3/4	-
DIMENSIONS (inches)	Length	87.2			87.2
	Width	61.7			61.7
	Height	48.6			48.6
OPERATING WT. (lbs.)		985			879
COMPRESSORS	Type	Scroll			Scroll
	Quantity	2			2
	Unit Capacity Steps (%)	50/100			50/100
CONDENSER COIL DATA	Face area (Sq. Ft.)	25.5			25.5
	Rows	1			1
	Fins per inch	23			23
	Tube diameter (in./MM)	1/25			1/25
	Circuitry Type	2-pass Microchannel			2-pass Microchannel
EVAPORATOR COIL DATA	Face area (Sq. Ft.)	11.1			11.1
	Rows	4			4
	Fins per inch	15			15
	Tube diameter	0.375			0.375
	Circuitry Type	Intertwined			Intertwined
	Refrigerant control	Orifice			Orifice

ZX12 Physical Data (Continued)

Component		Models					
		ZXG12			ZXE12		
Nominal Tonnage		10			10		
CONDENSER FAN DATA	Quantity of fans	2			2		
	Fan diameter (Inch)	22			22		
	Type	Prop			Prop		
	Drive type	Direct			Direct		
	Quantity of motors	2			2		
	Motor HP each	1/2			1/2		
	No. speeds	1			1		
	RPM	1085			1085		
	Nominal total CFM	8600			8600		
EVAP FAN DATA BELT DRIVE	Airflow Option	A	B	C	A	B	C
	Quantity	1	1	1	1	1	1
	Fan Size (Inch)	15 x 15	15 x 15	15 x 15	15 x 15	15 x 15	15 x 15
	Type	Centrifugal			Centrifugal		
	Motor Sheave	1VL44	1VP50	1VP56	1VL44	1VP50	1VP56
	Blower Sheave	AK79	AK79	BK85	AK79	AK79	BK85
	Belt	A50	A50	BX52	A50	A50	BX52
	Motor Max Bhp, 3 Phase	2.4	3.7	5.25	2.4	3.7	5.25
	RPM	1725	1725	1725	1725	1725	1725
	Frame size	56Y	56HZ	145TY	56Y	56HZ	145TY
FILTERS	Quantity - Size	4 - (20 x 20 x 2)[1]			4 - (20 x 20 x 2)[1]		

1. 2 in. Throwaway, Standard, MERV 4 (Minimum Efficiency Reporting Value).

ZX14 Physical Data

Component		Models			
		ZXG14			ZXE14
Nominal Tonnage		12.5			12.5
AHRI COOLING PERFORMANCE	Gross Capacity @ AHRI A point (Btu)	145000			145000
	AHRI net capacity (Btu)	135000			135000
	EER	10.8			11.0
	SEER	-			-
	IEER IntelliSpeed	12.5			12.7
	Nominal CFM	4000			4000
	System power (KW)	10.8			10.8
	Refrigerant type	R-410A			R-410A
	Refrigerant charge (lb-oz)				
	System 1	6-8			6-8
	System 2	6-12			6-12
AHRI HEATING PERFORMANCE	Heating Option	D	E	F	-
	Heating model	Low	Med	High	-
	1st. Stage Heat input (K Btu)	125	176	200	-
	2nd. Stage Heat input (K Btu)	180	220	250	-
	1st. Stage Heat output (K Btu)	100	141	160	-
	2nd. Stage Heat output (K Btu)	144	176	200	-
	AFUE %				-
	Steady state efficiency (%)	80	80	80	-
	No. burners	4	5	5	-
	No. stages	2	2	2	-
	Temperature Rise Range (ºF)	21-36	26-43	30-49	-
	Gas Limit Setting (ºF)	150	140	160	-
	Gas piping connection (in.)	3/4	3/4	3/4	-
DIMENSIONS (inches)	Length	87.2			87.2
	Width	61.7			61.7
	Height	55.26			55.26
OPERATING WT. (lbs.)		1047			941
COMPRESSORS	Type	Scroll			Scroll
	Quantity	2			2
	Unit Capacity Steps (%)	50/100			50/100
CONDENSER COIL DATA	Face area (Sq. Ft.)	24.9			24.9
	Rows	1			1
	Fins per inch	21			21
	Tube diameter (in./MM)	1.26/32			1.26/32
	Circuitry Type	2-pass Microchannel			2-pass Microchannel
EVAPORATOR COIL DATA	Face area (Sq. Ft.)	11.1			11.1
	Rows	4			4
	Fins per inch	15			15
	Tube diameter	0.375			0.375
	Circuitry Type	Intertwined			Intertwined
	Refrigerant control	TXV			TXV

ZX14 Physical Data (Continued)

Component		Models					
		ZXG14			ZXE14		
Nominal Tonnage		12.5			12.5		
CONDENSER FAN DATA	Quantity of fans	1			1		
	Fan diameter (Inch)	30			30		
	Type	Prop			Prop		
	Drive type	Direct			Direct		
	Quantity of motors	1			1		
	Motor HP each	1 1/2			1 1/2		
	No. speeds	1			1		
	RPM	1140			1140		
	Nominal total CFM	10600			10600		
EVAP FAN DATA BELT DRIVE	Airflow Option	A	B	C	A	B	C
	Quantity	1	1	1	1	1	1
	Fan Size (Inch)	15 x 15	15 x 15	15 x 15	15 x 15	15 x 15	15 x 15
	Type	Centrifugal			Centrifugal		
	Motor Sheave	1VL44	1VP50	1VP56	1VL44	1VP50	1VP56
	Blower Sheave	AK79	AK79	BK85	AK79	AK79	BK85
	Belt	A50	A52	BX54	A50	A52	BX54
	Motor Max Bhp, 3 Phase	2.9	3.7	5.25	2.9	3.7	5.25
	RPM	1750	1750	1750	1750	1750	1750
	Frame size	56Z	184TZ	184TZ	56Z	184TZ	184TZ
FILTERS	Quantity - Size	4 - (20 x 20 x 2)[1]			4 - (20 x 20 x 2)[1]		

1. 2 in. Throwaway, Standard, MERV 4 (Minimum Efficiency Reporting Value).

Optional Gas Heat

These gas-fired heaters have aluminized-steel or optional stainless steel, tubular heat exchangers with spark ignition.

Gas Piping

Proper sizing of gas piping depends on the cubic feet per hour of gas flow required, specific gravity of the gas and the length of run. "National Fuel Gas Code" Z223.1 (in U.S.A.) or the current Gas Installation Codes CSA-B149.1 (in Canada) should be followed in all cases unless superseded by local codes or gas utility requirements. Refer to the Pipe Sizing Table 9. The heating value of the gas may differ with locality. The value should be checked with the local gas utility.

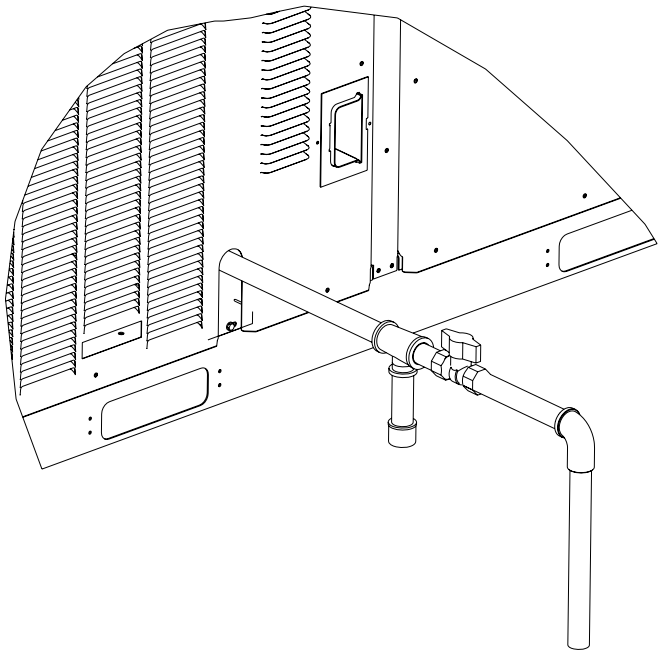

Figure 16: Side Entry Gas Piping

NOTE: Routing of gas piping must not interfere with the flue or heat compartment access.

Table 9: Gas Pipe Sizing - Capacity of Pipe

Length of Pipe (ft.)	Nominal Iron Pipe Size		
	3/4 in.	1 in.	1-1/4 in.
10	278	520	1050
20	190	350	730
30	152	285	590
40	130	245	500
50	115	215	440
60	105	195	400
70	96	180	370
80	90	170	350
90	84	160	320
100	79	150	305

NOTE: Maximum capacity of pipe in cubic feet of gas per hour based upon a pressure drop of 0.3 inch W.C. and 0.6 specific gravity gas.

NOTE: There may be a local gas utility requirement specifying a minimum diameter for gas piping. Units require either a 1/2 or 3/4 inch pipe connection at the entrance fitting. Line should not be sized smaller than the entrance fitting size.

Table 10: Gas Heat Supply Air

Model (Size)	Gas Heat Description	Opt.	Supply Air (CFM)	
			Heating	
			Min	Max
ZX08 (7.5)	Low	D	2260	3700
	Med	E	2260	3700
	High	F	2260	3790
ZX09 (8.5)	Low	D	2570	4210
	Med	E	2560	4300
	High	F	2550	4290
ZX12 (10)	Low	D	3030	4940
	Med	E	3020	4940
	High	F	2990	5010
ZX14 (12.5)	Low	D	3700	6350
	Med	E	3790	6270
	High	F	3780	6170

Gas Connection

The gas supply line can be routed within the space and roof curb, exiting through the unit's basepan. Refer to Figures 7 thru 9 for the gas piping inlet location. Typical supply piping arrangements are shown in Figure 16. All pipe nipples, fittings, and the gas cock are field supplied.

Gas piping recommendations:

1. A drip leg and a ground joint union must be installed in the gas piping.
2. Where required by local codes, a manual shut-off valve must be installed outside of the unit.
3. Use wrought iron or steel pipe for all gas lines. Pipe dope should be applied sparingly to male threads only. If local codes allow the use of a flexible gas appliance connector, always use a new listed connector. Do not use a connector which has previously serviced another gas appliance.

⚠WARNING

Natural gas may contain some propane. Propane is an excellent solvent and will quickly dissolve white lead and most standard commercial compounds. A special pipe dope must be used when assembling wrought iron or steel pipe. Shellac based compounds such as Gaskolac or Stalastic, and compounds such as Rectorseal #5, Clydes's or John Crane may be used.

4. All piping should be cleaned of dirt and scale by hammering on the outside of the pipe and blowing out loose particles. Before initial start-up, be sure that all gas lines external to the unit have been purged of air.
5. The gas supply should be a separate line and installed in accordance with all safety codes as prescribed under "Limitations".
6. A 1/8-inch NPT plugged tapping, accessible for test gauge connection, must be installed immediately upstream of the gas supply connection to the unit.
7. After the gas connections have been completed, open the main shut-off valve admitting *normal gas pressure* to the mains. *Check all joints for leaks with soap solution or other material suitable for the purpose.* **NEVER USE A FLAME.**

⚠WARNING

FIRE OR EXPLOSION HAZARD

Failure to follow the safety warning exactly could result in serious injury, death or property damage.

Never test for gas leaks with an open flame. Use a commercially available soap solution made specifically for the detection of leaks to check all connections. A fire or explosion may result causing property damage, personal injury or loss of life.

⚠ CAUTION

The furnace and its individual shut-off valve must be disconnected from the gas supply piping system during any pressure testing at pressures in excess of 1/2 PSIG.

Pressures greater than 1/2 PSIG will cause gas valve damage resulting in a hazardous condition. If it is subjected to a pressure greater than 1/2 PSIG, the gas valve must be replaced.

The furnace must be isolated from the gas supply piping system by closing its individual manual shut-off valve during any pressure testing of the gas supply piping system at test pressures equal to or less than 1/2 PSIG.

⚠WARNING

Threaded joints should be coated with a sealing compound that is resistant to the action of liquefied petroleum gases. **Do not use Teflon tape.**

Check all connections for leaks when piping is completed using a soap solution. **NEVER USE A FLAME.**

⚠WARNING

FIRE OR EXPLOSION HAZARD

Failure to follow the safety warning exactly could result in serious injury, death or property damage.

Never test for gas leaks with an open flame. Use a commercially available soap solution made specifically for the detection of leaks to check all connections. A fire or explosion may result causing property damage, personal injury or loss of life.

Combustion Air and Flue Exhaust

Venting slots in the heating compartment access panel remove the need for a combustion air hood. The gas heat flue exhaust is routed from the unit through a field installed exhaust hood with screen (See Figure 17 for location of hood within the unit and Figure 18 for Installation of the hood. If necessary, a flue exhaust extension may be installed at the point of installation.

Figure 17: Flue Exhaust Hood Shipping Location

Figure 18: Flue Exhaust Hood Installed

Options/Accessories

Economizer

The Economizer can be a factory installed option or a field installed accessory. If factory installed, refer to the instructions included with the outdoor air hood to complete the assembly. Field installed Economizer accessories include complete instructions for installation.

There are two Economizer options. Each is specific to footprint and unit voltage:

1. Vertical Flow application with barometric relief standard.
2. Horizontal Flow application with barometric relief standard.

Power Exhaust

The Power Exhaust is a field installed accessory. Field installed Power Exhaust accessories include complete instructions for installation.

The Power Exhaust factory installed option is for Down Flow application only.

There are two field installed Power Exhaust accessories:

1. Down Flow application.
2. Horizontal Flow application that requires the purchase of a barometric relief hood.

Rain Hood

All of the hood components, including the mist eliminators, the gasketing and the hardware for assembling, are packaged and located between the condenser coil section and the main unit cabinet, if the unit has factory installed options. If field installed accessories are being installed all parts necessary for the installation comes in the accessory.

Blower Phasing

ZX units are properly phased at the factory. Check for proper blower rotation. If the blower rotates in the wrong direction at start-up, the electrical connection to the unit is misphased. Change the phasing of the **Field Line Connection at the factory or field supplied disconnect** to obtain proper rotation.

⚠ CAUTION

When installing equipment in a facility with a 3 phase high-leg delta power supply, care must be taken to ensure that the high-leg conductor is not attached to either of the two legs of the (single phase, direct drive) X13 or ECM motors. Failure to do so can result in the motor acting erratically or not running at all.

Check for the high leg conductor by checking voltage of each phase to ground.

Example: A or L1 phase to ground, voltage reading is 120V. B or L2 phase to ground, voltage reading is 195 to 208V. C or L3 phase to ground, voltage reading is 120V. Therefore B or L2 phase is the high Leg. The high should always be wired to the center or B or L2 tap.

Note: Check all three phase motors and compressors for proper rotation after making a change. If it is necessary to change 3 phase motor rotation, swap A or L1 and C or L3 only.

Blower Rotation

Check for proper supply air blower rotation. If the blower is rotating backwards, the line voltage at the unit point of power connection is misphased (See 'BLOWER PHASING').

Table 11: Supply Air Limitations

Model (Size)	Supply Air (CFM)	
	Minimum	Maximum
ZX08 (7.5)	2250	3750
ZX09 (8.5)	2550	4250
ZX12 (10)	3000	5000
ZX14 (12.5)	3750	6000

Belt Tension

The tension on the belt should be adjusted as shown in Figure 19.

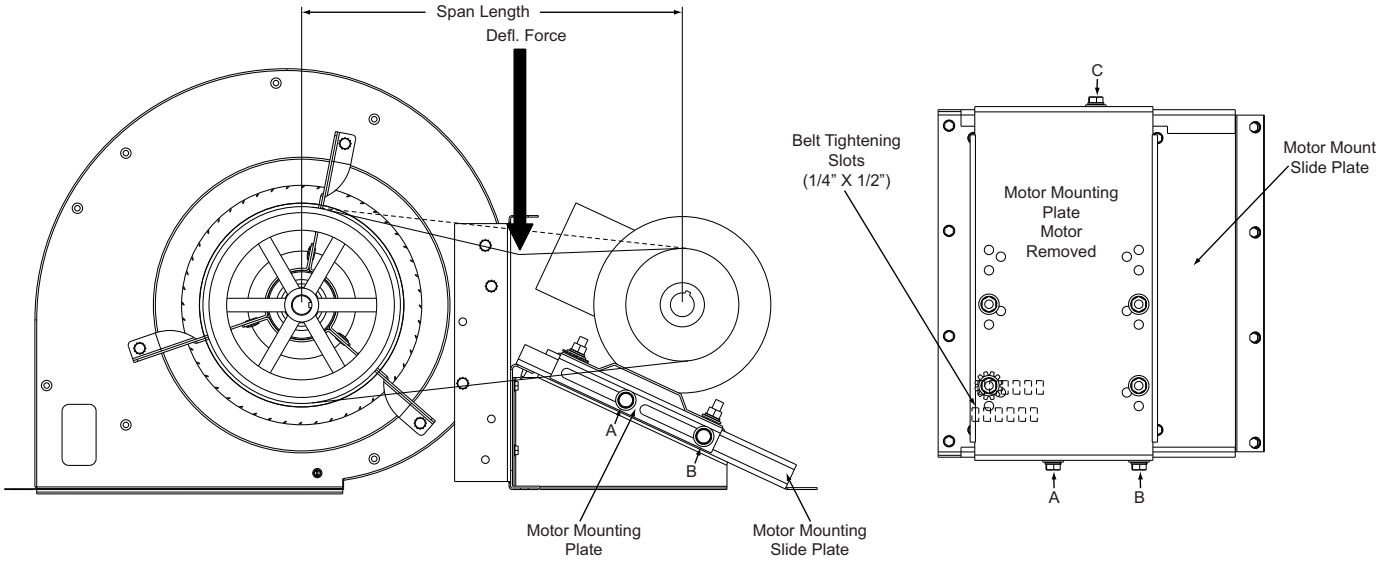

Figure 19: Belt Adjustment

⚠ CAUTION

Procedure for adjusting belt tension:

1. Loosen the three nuts (A and B on side and C on back) of motor mount slide plate.
2. Adjust tension by placing a flat heat screwdriver into the belt tightening slots (1/4" X 1/2") in the motor mount slide plate and applying pressure against the motor mounting plate. See Figure 20.
3. Tighten the three loosened nuts (A, B and C).
4. Determine the deflection distance from normal position, use a straight edge from sheave to sheave as reference line. Use belt tension checker to apply a perpendicular force to the belt at the midpoint of the span as shown. Deflection distance of 4mm (5/32") is obtained.
5. After adjustments are completed re-tighten nuts (A, B and C).

Altitude and Temperature Correction for CFM, Static Pressure and Power.

The information below should be used to assist in application of product when being applied at altitudes at or exceeding 1000 feet above sea level.

The air flow rates listed in the standard blower performance tables are based on standard air at sea level. As the altitude or temperature increases, the density of air decreases. In order to use the indoor blower tables for high altitude applications, certain corrections are necessary.

A centrifugal fan is a "constant volume" device. This means that, if the rpm remains constant, the CFM delivered is the same regardless of the density of the air. However, since the air at high altitude is less dense, less static pressure will be generated and less power will be required than a similar application at sea level. Air density correction factors are shown in Table 12 and Figure 20.

Table 12: Altitude/Temperature Correction Factors

Air Temp.	Altitude (Ft.)										
	0	1000	2000	3000	4000	5000	6000	7000	8000	9000	10000
40	1.060	1.022	0.986	0.950	0.916	0.882	0.849	0.818	0.788	0.758	0.729
50	1.039	1.002	0.966	0.931	0.898	0.864	0.832	0.802	0.772	0.743	0.715
60	1.019	0.982	0.948	0.913	0.880	0.848	0.816	0.787	0.757	0.729	0.701
70	1.000	0.964	0.930	0.896	0.864	0.832	0.801	0.772	0.743	0.715	0.688
80	0.982	0.947	0.913	0.880	0.848	0.817	0.787	0.758	0.730	0.702	0.676
90	0.964	0.929	0.897	0.864	0.833	0.802	0.772	0.744	0.716	0.689	0.663
100	0.946	0.912	0.880	0.848	0.817	0.787	0.758	0.730	0.703	0.676	0.651

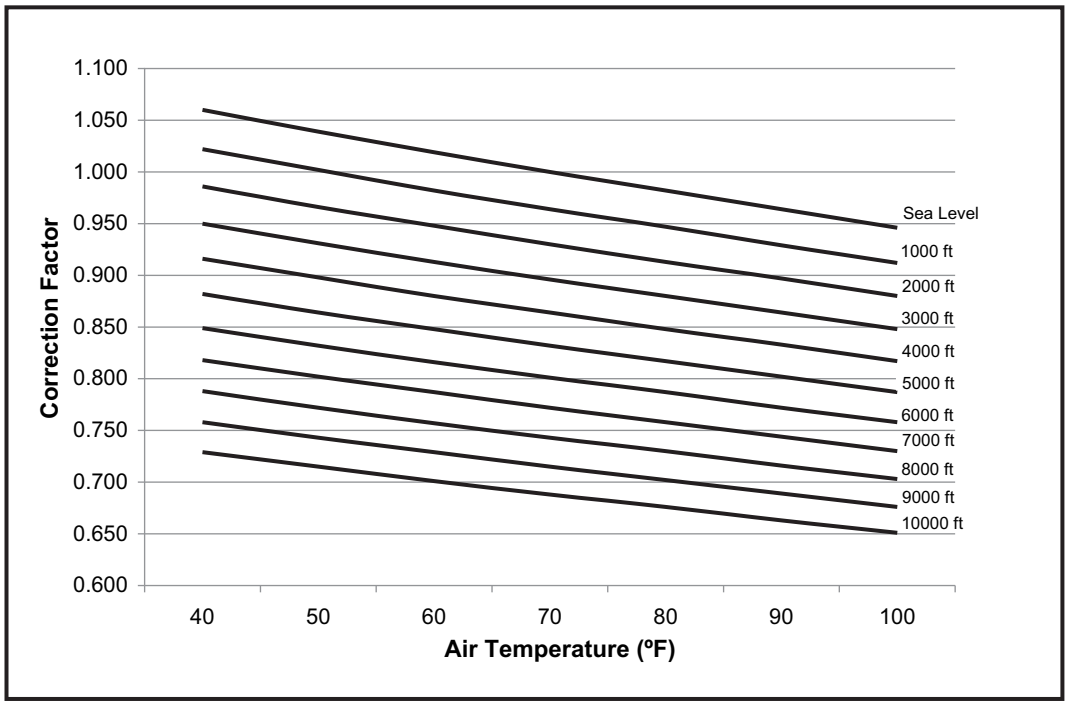

Figure 20: Altitude/Temperature Correction Factors

The examples below will assist in determining the airflow performance of the product at altitude.

Example 1: What are the corrected CFM, static pressure, and BHP at an elevation of 5,000 ft. if the airflow performance data is 3,000 CFM, 1.4 IWC and 2.0 BHP?

Solution: At an elevation of 5,000 ft. the indoor blower will still deliver 3,000 CFM if the rpm is unchanged. However, the Altitude correction must be used to determine the static pressure and BHP. Since no temperature data is given, we will assume an Air Temperature of 70°F. The Altitude/Temperature Factors show the correction factor to be 0.832.

Corrected static pressure = 1.4 x 0.832 = 1.16 IWC

Corrected BHP = 2.0 x 0.832 = 1.66

Example 2: A system, located at 5,000 feet of elevation, is to deliver 3,000 CFM at a static pressure of 1.4". Use the unit blower tables to select the blower speed and the BHP requirement.

Solution: As in the example above, no temperature information is given so 70°F is assumed.

The 1.4" static pressure given is at an elevation of 5,000 ft. The first step is to convert this static pressure to equivalent sea level conditions.

Sea level static pressure = 1.4" / .832 = 1.68"

Enter the Supply Air Blower Performance Table at 3,000 CFM and static pressure of 1.68". The rpm listed will be the same rpm needed at 5,000 ft.

Suppose that the corresponding BHP listed in the table is 2.0. This value must be corrected for elevation.

BHP at 5,000 ft. = 2.0 x .832 = 1.66

Drive Selection

1. Determine side or bottom supply duct Application.
2. Determine desired airflow.
3. Calculate or measure the amount of external static pressure.
   - Add or deduct any additional static resistance from “Additional Static Resistance Table”.
4. Using the operating point determined from steps 1, 2 & 3, locate this point on the appropriate supply air blower performance table. (Linear interpolation may be necessary.)
5. Noting the RPM and BHP from step 4, locate the appropriate motor and, or drive.
6. Review the BHP compared to the motor options available. Select the appropriate motor and, or drive.
7. Review the RPM range for the motor options available. Select the appropriate drive if multiple drives are available for the chosen motor.
8. Determine turns open to obtain the desired operation point.

Example

1. 3400 CFM
2. 1.6 iwg
3. Using the airflow performance table below, the following data point was located: 1078 RPM & 2.66 BHP.
4. Using the RPM selection table below, Model ZX and Size 08 (Tons) 7.5 is found.
5. 2.59 BHP exceeds the maximum continuous BHP rating of the 1.5 HP motor. The 3 HP motor is required.
6. 1078 RPM is within the range of the 3 HP drives.
7. Using the 3 HP motor and drive, 1/2 turns open will achieve 1078 RPM.

Airflow Performance

Example Supply Air Blower Performance
ZX08 (7.5 Ton) Bottom Duct

CFM	Available External Static																			
	0.2		0.4		0.6		0.8		1.0		1.2		1.4		1.6		1.8		2.0	
	RPM	BHP	RPM	BHP	RPM	BHP	RPM	BHP	RPM	BHP	RPM	BHP	RPM	BHP	RPM	BHP	RPM	BHP	RPM	BHP
2250	577	0.50	636	0.68	693	0.86	749	1.03	803	1.21	856	1.39	908	1.57	959	1.74	1009	1.91	1059	2.07
2400	591	0.59	650	0.77	707	0.95	763	1.13	817	1.31	870	1.48	922	1.66	973	1.83	1023	2.00	1073	2.17
2600	611	0.73	670	0.91	727	1.09	782	1.27	836	1.44	889	1.62	941	1.80	992	1.97	1043	2.14	1092	2.31
2800	631	0.88	690	1.06	747	1.24	803	1.42	857	1.60	910	1.77	962	1.95	1013	2.12	1063	2.29	--	--
3000	653	1.05	711	1.23	768	1.41	824	1.59	878	1.76	931	1.94	983	2.12	1034	2.29	1084	2.46	--	--
3200	675	1.23	733	1.41	790	1.59	846	1.77	900	1.94	953	2.12	1005	2.30	1056	2.47	1100	2.64	--	--
3400	673	1.35	740	1.54	802	1.73	859	1.91	913	2.10	964	2.28	1014	2.46	1064	2.64	--	--	--	--

Standard Static Option with Motor rated at 2.4-hp
Medium Static Option with Motor rated at 2.9-hp
High Static Option with Motor rated at 3.7-hp
-- Exceeds recommended Blower speed

Example RPM Selection

Model	Size (Tons)	Airflow Option	Phase	Max BHP	Blower Sheave	Motor Sheave	6 Turns Open	5 Turns Open	4 Turns Open	3 Turns Open	2 Turns Open	1 Turns Open	Fully Closed
ZX	08 (7.5)	Std.	3	2.4	AK74	1VL34	N/A	475	525	575	625	675	725
		Med.	3	2.9	AK74	1VL44	N/A	700	750	800	850	900	950
		H. Static	3	3.7	AK74	1VP50	N/A	850	900	950	1000	1050	1100

Example Additional Static Resistance

Model	Size (Tons)	CFM	Cooling Only	Economizer	2” Filter	Electric Heat kW				
						6/6.5	10.5/11	14/15	16/16.5	24.8/27.8
ZX	08 (7.5), 09 (8.5), 12 (10.0), 14 (12.5)	2200	0.04	0.18	0.10	---	---	---	0.07	0.09
		2600	0.06	0.24	0.13	---	---	---	0.09	0.11
		3000	0.10	0.35	0.16	---	---	---	0.12	0.14
		3400	0.13	0.47	0.19	---	---	---	0.15	0.18
		3800	0.16	0.59	0.22	---	---	---	0.19	0.22
		4000	0.17	0.66	0.24	---	---	---	0.21	0.24
		4400	0.20	0.79	0.27	---	---	---	0.25	0.29
		4800	0.22	0.91	0.31	---	---	---	0.30	0.34
		5200	0.24	1.04	0.35	---	---	---	0.35	0.39
		5600	0.26	1.17	0.39	---	---	---	0.41	0.45
		6000	0.28	1.30	0.43	---	---	---	0.48	0.52

Table 13: ZX08-14 Side Duct Application (Belt Drive)

ZX08 (7.5 Ton) Side Duct

CFM	Available External Static																			
	0.2		0.4		0.6		0.8		1.0		1.2		1.4		1.6		1.8		2.0	
	RPM	BHP	RPM	BHP	RPM	BHP	RPM	BHP	RPM	BHP	RPM	BHP	RPM	BHP	RPM	BHP	RPM	BHP	RPM	BHP
2250	557	0.48	623	0.67	685	0.85	742	1.04	796	1.23	848	1.41	898	1.59	947	1.77	997	1.94	1049	2.11
2400	569	0.56	636	0.75	698	0.94	755	1.13	809	1.32	860	1.50	910	1.68	960	1.86	1010	2.03	1062	2.20
2600	588	0.69	655	0.88	716	1.07	773	1.26	827	1.44	879	1.63	929	1.81	978	1.98	1029	2.16	1080	2.32
2800	607	0.83	674	1.02	736	1.21	793	1.40	847	1.58	898	1.77	948	1.95	998	2.13	1048	2.30	1100	2.47
3000	628	0.99	695	1.18	757	1.37	814	1.56	868	1.74	919	1.92	969	2.11	1019	2.28	1069	2.45	--	--
3200	650	1.16	717	1.35	779	1.54	836	1.73	890	1.91	941	2.10	991	2.28	1041	2.45	1091	2.63	--	--
3400	673	1.35	740	1.54	802	1.73	859	1.91	913	2.10	964	2.28	1014	2.46	1064	2.64	--	--	--	--
3600	697	1.55	764	1.74	826	1.93	883	2.11	937	2.30	988	2.48	1038	2.67	1088	2.84	--	--	--	--
3750	716	1.71	783	1.90	844	2.09	901	2.28	955	2.46	1007	2.65	1057	2.83	1100	3.00	--	--	--	--

Standard Static Option with Motor rated at 2.4-hp
Medium Static Option with Motor rated at 2.9-hp
High Static Option with Motor rated at 3.7-hp
-- Exceeds recommended Blower speed

ZX09 (8.5 Ton) Side Duct

CFM	Available External Static																			
	0.2		0.4		0.6		0.8		1.0		1.2		1.4		1.6		1.8		2.0	
	RPM	BHP	RPM	BHP	RPM	BHP	RPM	BHP	RPM	BHP	RPM	BHP	RPM	BHP	RPM	BHP	RPM	BHP	RPM	BHP
2550	549	0.45	609	0.69	668	0.91	727	1.11	784	1.31	840	1.49	893	1.68	944	1.87	991	2.06	1035	2.25
2600	552	0.48	611	0.72	671	0.94	729	1.14	787	1.34	842	1.53	896	1.71	946	1.90	994	2.09	1038	2.29
2800	562	0.62	621	0.86	681	1.07	739	1.28	796	1.47	852	1.66	905	1.85	956	2.03	1004	2.22	1048	2.42
3000	573	0.77	632	1.00	692	1.22	750	1.43	807	1.62	863	1.81	917	2.00	967	2.18	1015	2.37	1059	2.57
3200	585	0.93	644	1.16	704	1.38	762	1.59	820	1.78	875	1.97	929	2.16	979	2.34	1027	2.53	1071	2.73
3400	598	1.10	658	1.34	717	1.55	776	1.76	833	1.95	889	2.14	942	2.33	993	2.51	1040	2.70	1084	2.90
3600	613	1.28	672	1.52	732	1.74	790	1.94	848	2.14	903	2.32	957	2.51	1008	2.70	1055	2.89	1099	3.08
3800	629	1.47	688	1.71	748	1.93	806	2.13	864	2.33	919	2.52	973	2.70	1024	2.89	1071	3.08	--	--
4000	646	1.68	706	1.91	765	2.13	824	2.34	881	2.53	937	2.72	990	2.90	1041	3.09	1088	3.28	--	--
4200	665	1.89	724	2.12	784	2.34	842	2.55	900	2.74	955	2.93	1009	3.11	1059	3.30	--	--	--	--
4250	670	1.94	729	2.18	789	2.40	847	2.60	904	2.80	960	2.98	1014	3.17	1064	3.35	--	--	--	--

Standard Static Option with Motor rated at 2.4-hp
Medium Static Option with Motor rated at 2.4-hp
High Static Option with Motor rated at 3.7-hp
-- Exceeds recommended Blower speed

ZX12 (10 Ton) Side Duct

CFM	Available External Static																			
	0.2		0.4		0.6		0.8		1.0		1.2		1.4		1.6		1.8		2.0	
	RPM	BHP	RPM	BHP	RPM	BHP	RPM	BHP	RPM	BHP	RPM	BHP	RPM	BHP	RPM	BHP	RPM	BHP	RPM	BHP
3000			689	0.94	740	1.19	790	1.44	841	1.70	891	1.94	941	2.19	990	2.43	1038	2.66	1085	2.89
3200	654	0.84	702	1.09	752	1.35	803	1.60	854	1.85	904	2.10	954	2.34	1003	2.58	1051	2.82	1098	3.04
3400	665	1.00	715	1.26	766	1.51	816	1.77	867	2.02	917	2.27	967	2.51	1016	2.75	1064	2.99	1111	3.21
3600	680	1.19	730	1.44	780	1.70	831	1.95	881	2.20	932	2.45	982	2.70	1031	2.94	1079	3.17	1125	3.40
3800	695	1.39	745	1.64	796	1.90	846	2.15	897	2.40	947	2.65	997	2.90	1046	3.14	1094	3.37	1141	3.60
4000	712	1.61	762	1.86	812	2.12	863	2.37	914	2.62	964	2.87	1014	3.12	1063	3.36	1111	3.59	1158	3.82
4200	729	1.85	779	2.10	830	2.36	881	2.61	931	2.86	982	3.11	1032	3.35	1081	3.59	1129	3.83	1174	4.06
4400	748	2.10	798	2.36	849	2.61	899	2.87	950	3.12	1000	3.37	1050	3.61	1099	3.85	1147	4.09	--	--
4600	768	2.38	818	2.64	869	2.89	919	3.15	970	3.40	1020	3.65	1070	3.89	1119	4.13	1167	4.36	--	--
4800	794	2.68	839	2.93	889	3.19	940	3.44	991	3.69	1041	3.94	1091	4.19	1140	4.43	--	--	--	--
5000	811	3.00	861	3.25	912	3.51	962	3.70	1013	4.01	1063	4.26	1113	4.50	1162	4.74	--	--	--	--

Standard Static Option with Motor rated at 2.4-hp
Medium Static Option with Motor rated at 3.7-hp
High Static Option with Motor rated at 5.25-hp
-- Exceeds recommended Blower speed

ZX14 (12.5 Ton) Side Duct

CFM	Available External Static																			
	0.2		0.4		0.6		0.8		1.0		1.2		1.4		1.6		1.8		2.0	
	RPM	BHP	RPM	BHP	RPM	BHP	RPM	BHP	RPM	BHP	RPM	BHP	RPM	BHP	RPM	BHP	RPM	BHP	RPM	BHP
3750	684	1.33	741	1.56	792	1.81	840	2.07	884	2.33	927	2.60	971	2.85	1017	3.09	1066	3.30	1121	3.49
3800	688	1.38	745	1.61	797	1.85	844	2.12	888	2.38	932	2.65	976	2.90	1021	3.14	1071	3.35	1125	3.54
4000	706	1.58	763	1.81	814	2.06	861	2.32	906	2.59	949	2.85	993	3.11	1039	3.35	1088	3.56	1142	3.74
4200	724	1.81	781	2.04	832	2.29	879	2.55	924	2.82	967	3.08	1011	3.34	1057	3.57	1106	3.79	1160	3.97
4400	742	2.06	799	2.29	850	2.54	897	2.80	942	3.06	985	3.33	1029	3.58	1075	3.82	1124	4.03	1178	4.22
4600	760	2.32	817	2.55	869	2.80	916	3.06	960	3.33	1004	3.59	1048	3.85	1093	4.08	1143	4.30	--	--
4800	779	2.60	836	2.83	888	3.08	935	3.34	979	3.61	1023	3.88	1067	4.13	1112	4.37	1162	4.58	--	--
5000	799	2.91	856	3.14	907	3.39	954	3.65	999	3.91	1042	4.18	1086	4.43	1132	4.67	--	--	--	--
5200	819	3.23	876	3.46	927	3.71	974	3.97	1019	4.23	1062	4.50	1106	4.75	1152	4.99	--	--	--	--
5400	839	3.57	**896**	**3.80**	953	4.04	995	4.31	1039	4.57	1083	4.84	1127	5.09	--	--	--	--	--	--
5600	**860**	**3.92**	**917**	**4.15**	969	4.40	1016	4.66	1060	4.93	1104	5.19	--	--	--	--	--	--	--	--
5800	**882**	**4.30**	**939**	**4.53**	990	4.77	1037	5.04	--	--	--	--	--	--	--	--	--	--	--	--
6000	**904**	**4.69**	961	4.92	1012	5.17	--	--	--	--	--	--	--	--	--	--	--	--	--	--

Standard Static Option with Motor rated at 2.9-hp
Medium Static Option with Motor rated at 3.7-hp
High Static Option with Motor rated at 5.25-hp
Bold Field-supplied BK95 x 1 fixed pulley (p/n 1074787) with Motor rated at 5.25-hp
-- Exceeds recommended Blower speed

Table 14: ZX08-14 Bottom Duct Application (Belt Drive)

ZX08 (7.5 Ton) Bottom Duct

CFM	Available External Static																			
	0.2		0.4		0.6		0.8		1.0		1.2		1.4		1.6		1.8		2.0	
	RPM	BHP	RPM	BHP	RPM	BHP	RPM	BHP	RPM	BHP	RPM	BHP	RPM	BHP	RPM	BHP	RPM	BHP	RPM	BHP
2250	577	0.50	636	0.68	693	0.86	749	1.03	803	1.21	856	1.39	908	1.57	959	1.74	1009	1.91	1059	2.07
2400	591	0.59	650	0.77	707	0.95	763	1.13	817	1.31	870	1.48	922	1.66	973	1.83	1023	2.00	1073	2.17
2600	611	0.73	670	0.91	727	1.09	782	1.27	836	1.44	889	1.62	941	1.80	992	1.97	1043	2.14	1092	2.31
2800	631	0.88	690	1.06	747	1.24	803	1.42	857	1.60	910	1.77	962	1.95	1013	2.12	1063	2.29	--	--
3000	653	1.05	711	1.23	768	1.41	824	1.59	878	1.76	931	1.94	983	2.12	1034	2.29	1084	2.46	--	--
3200	675	1.23	733	1.41	790	1.59	846	1.77	900	1.94	953	2.12	1005	2.30	1056	2.47	1100	2.64	--	--
3400	697	1.42	755	1.60	813	1.78	868	1.96	922	2.14	975	2.31	1027	2.49	1078	2.66	--	--	--	--
3600	719	1.63	778	1.80	835	1.98	891	2.16	945	2.34	998	2.52	1050	2.69	1100	2.87	--	--	--	--
3750	736	1.78	795	1.96	852	2.14	908	2.32	962	2.50	1015	2.68	1067	2.85	--	--	--	--	--	--

Standard Static Option with Motor rated at 2.4-hp
Medium Static Option with Motor rated at 2.9-hp
High Static Option with Motor rated at 3.7-hp
-- Exceeds recommended Blower speed

ZX09 (8.5 Ton) Bottom Duct

CFM	Available External Static																			
	0.2		0.4		0.6		0.8		1.0		1.2		1.4		1.6		1.8		2.0	
	RPM	BHP	RPM	BHP	RPM	BHP	RPM	BHP	RPM	BHP	RPM	BHP	RPM	BHP	RPM	BHP	RPM	BHP	RPM	BHP
2550	570	0.59	630	0.77	687	0.94	744	1.13	799	1.31	852	1.49	903	1.67	953	1.85	1002	2.01	1049	2.16
2600	573	0.63	632	0.80	690	0.98	747	1.16	801	1.34	855	1.53	906	1.71	956	1.88	1005	2.04	1052	2.19
2800	585	0.77	645	0.94	703	1.12	759	1.30	814	1.49	867	1.67	918	1.85	968	2.02	1017	2.18	1064	2.33
3000	599	0.92	658	1.10	716	1.27	773	1.46	827	1.64	880	1.82	932	2.00	982	2.18	1030	2.34	1077	2.49
3200	614	1.09	673	1.27	731	1.44	787	1.63	842	1.81	895	1.99	947	2.17	997	2.35	1045	2.51	1092	2.66
3400	630	1.28	690	1.45	747	1.62	804	1.81	859	1.99	912	2.18	963	2.35	1013	2.53	1062	2.69	--	--
3600	648	1.47	708	1.64	765	1.82	822	2.00	877	2.19	930	2.37	981	2.55	1031	2.72	1080	2.88	--	--
3800	668	1.67	727	1.84	785	2.02	841	2.20	896	2.39	949	2.57	1001	2.75	1051	2.92	1099	3.09	--	--
4000	689	1.89	748	2.06	806	2.23	863	2.42	917	2.60	971	2.79	1022	2.96	1072	3.14	--	--	--	--
4200	712	2.11	771	2.28	829	2.46	886	2.64	940	2.83	994	3.01	1045	3.19	1095	3.36	--	--	--	--
4250	718	2.17	777	2.34	842	2.52	892	2.70	946	2.88	1000	3.07	1051	3.24	1100	3.42	--	--	--	--

Standard Static Option with Motor rated at 2.4-hp
Medium Static Option with Motor rated at 2.4-hp
High Static Option with Motor rated at 3.7-hp

ZX12 (10 Ton) Bottom Duct

CFM	Available External Static																			
	0.2		0.4		0.6		0.8		1.0		1.2		1.4		1.6		1.8		2.0	
	RPM	BHP	RPM	BHP	RPM	BHP	RPM	BHP	RPM	BHP	RPM	BHP	RPM	BHP	RPM	BHP	RPM	BHP	RPM	BHP
3000	653	0.79	706	1.02	758	1.25	808	1.49	858	1.72	907	1.95	955	2.18	1003	2.40	1049	2.62	1095	2.82
3200	667	0.94	720	1.17	771	1.40	822	1.64	872	1.88	921	2.11	969	2.34	1016	2.56	1063	2.77	1109	2.97
3400	682	1.11	734	1.34	786	1.57	837	1.81	887	2.04	936	2.28	984	2.50	1031	2.73	1078	2.94	1124	3.14
3600	697	1.29	750	1.52	802	1.76	853	1.99	903	2.23	952	2.46	1000	2.69	1047	2.91	1094	3.12	1140	3.32
3800	714	1.50	767	1.73	819	1.96	870	2.20	920	2.43	969	2.67	1017	2.90	1064	3.12	1111	3.33	1157	3.53
4000	733	1.73	786	1.96	837	2.19	888	2.43	938	2.66	987	2.90	1035	3.12	1083	3.34	1129	3.56	1174	3.76
4200	753	1.98	806	2.21	857	2.44	908	2.68	958	2.91	1007	3.15	1055	3.37	1102	3.60	1149	3.81	--	--
4400	774	2.25	827	2.48	879	2.72	930	2.95	979	3.19	1028	3.42	1076	3.65	1124	3.87	1170	4.08	--	--
4600	797	2.55	850	2.78	902	3.02	952	3.25	1002	3.49	1051	3.72	1099	3.95	1147	4.17	--	--	--	--
4800	822	2.88	874	3.11	926	3.34	977	3.58	1027	3.81	1076	4.05	1124	4.27	1171	4.50	--	--	--	--
5000	848	3.23	901	3.46	952	3.69	1003	3.93	1053	4.16	1102	4.40	1150	4.62	--	--	--	--	--	--

Standard Static Option with Motor rated at 2.4-hp
Medium Static Option with Motor rated at 3.7-hp
High Static Option with Motor rated at 5.25-hp

ZX14 (12.5 Ton) Bottom Duct

CFM	Available External Static																			
	0.2		0.4		0.6		0.8		1.0		1.2		1.4		1.6		1.8		2.0	
	RPM	BHP	RPM	BHP	RPM	BHP	RPM	BHP	RPM	BHP	RPM	BHP	RPM	BHP	RPM	BHP	RPM	BHP	RPM	BHP
3750	715	1.46	762	1.68	810	1.91	858	2.13	907	2.36	957	2.58	1008	2.80	1060	3.02	1113	3.24	1167	3.46
3800	720	1.51	766	1.73	814	1.96	862	2.18	911	2.41	961	2.63	1012	2.85	1064	3.07	1117	3.29	1171	3.51
4000	737	1.72	784	1.94	832	2.17	880	2.39	929	2.62	979	2.84	1030	3.07	1082	3.29	1135	3.51	--	--
4200	756	1.95	803	2.17	851	2.40	899	2.63	948	2.85	998	3.07	1049	3.30	1101	3.52	1154	3.74	--	--
4400	777	2.20	824	2.42	871	2.65	920	2.87	969	3.10	1019	3.32	1069	3.55	1121	3.77	1174	3.98	--	--
4600	799	2.47	846	2.69	893	2.92	941	3.14	990	3.37	1040	3.59	1091	3.81	1143	4.04	--	--	--	--
4800	822	2.75	869	2.98	916	3.20	965	3.43	1014	3.65	1064	3.88	1114	4.10	1166	4.32	--	--	--	--
5000	846	3.06	893	3.28	941	3.51	989	3.73	1038	3.96	1088	4.18	1139	4.41	--	--	--	--	--	--
5200	872	3.39	919	3.61	966	3.83	1015	4.06	1064	4.28	1114	4.51	1164	4.73	--	--	--	--	--	--
5400	899	3.73	946	3.95	993	4.18	1042	4.40	1091	4.63	1141	4.85	--	--	--	--	--	--	--	--
5600	927	4.09	974	4.32	1021	4.54	1070	4.77	1119	4.99	1169	5.22	--	--	--	--	--	--	--	--
5800	956	4.47	1003	4.70	1051	4.92	1099	5.15	--	--	--	--	--	--	--	--	--	--	--	--
6000	987	4.87	1034	5.10	--	--	--	--	--	--	--	--	--	--	--	--	--	--	--	--

Standard Static Option with Motor rated at 2.4-hp
Medium Static Option with Motor rated at 3.7-hp
High Static Option with Motor rated at 5.25-hp

Table 15: RPM Selection

Model	Size (Tons)	Airflow Option	Phase	MAX BHP	Blower Sheave	Motor Sheave	6Turns Open	5Turns Open	4Turns Open	3 Turns Open	2 Turns Open	1 Turns Open	Fully Closed
ZX	08 (7.5)	Std.	3	2.4	AK74	1VL34	N/A	475	525	575	625	675	725
		Med.	3	2.9	AK74	1VL44	N/A	700	750	800	850	900	950
		H. Static	3	3.7	AK74	1VP50	N/A	850	900	950	1000	1050	1100
ZX	9 (8.5)	Std.	3	2.4	AK74	1VL34	N/A	475	525	575	625	675	725
		Med.	3	2.4	AK74	1VL44	N/A	700	750	800	850	900	950
		H. Static	3	3.7	AK74	1VP50	N/A	850	900	950	1000	1050	1100
ZX	12 (10)	Std.	3	2.4	AK79	1VL44	N/A	653	700	747	793	840	887
		Med.	3	3.7	AK79	1VP50	N/A	793	840	887	933	980	1027
		H. Static	3	5.25	BK85	1VP56	953	997	1041	1085	1130	1174	N/A
ZX	14 (12)	Std.	3	2.9	AK79	1VL44	N/A	653	700	747	793	840	887
		Med.	3	3.7	AK79	1VP50	N/A	793	840	887	933	980	1027
		H. Static	3	5.25	BK85	1VP56	953	997	1041	1085	1130	1174	N/A

Table 16: Indoor Blower Specifications

Model	Size (Tons)	Airflow Option	Motor						Motor Sheave			Blower Sheave			Belt
			Phase	MAX BHP	RPM	Eff.	SF	Frame	Datum Dia. (in.)	Bore (in.)	Model	Datum Dia. (in.)	Bore (in.)	Model	
ZX	08 (7.5)	Std.	3	2.4	1725	0.80	1.15	56Y	1.9 - 2.9	5/8	1VL34	7.0	1	AK74	A47
		Med.	3	2.9	1725	0.81	1.15	56Y	2.8 - 3.8	7/8	1VL44	7.0	1	AK74	A48
		H. Static	3	3.7	1725	0.84	1.15	56HZ	3.4 - 4.4	7/8	1VP50	7.0	1	AK74	A50
ZX	09 (8.5)	Std.	3	2.4	1725	0.80	1.15	56Y	1.9 - 2.9	5/8	1VL34	7.0	1	AK74	A47
		Med.	3	2.4	1725	0.80	1.15	56Y	2.8 - 3.8	5/8	1VL44	7.0	1	AK74	A48
		H. Static	3	3.7	1725	0.84	1.15	56HZ	3.4 - 4.4	7/8	1VP50	7.0	1	AK74	A50
ZX	12 (10)	Std.	3	2.4	1725	0.80	1.15	56Y	2.8 - 3.8	5/8	1VL44	7.5	1	AK79	A50
		Med.	3	3.7	1725	0.84	1.15	56HZ	3.4 - 4.4	7/8	1VP50	7.5	1	AK79	A50
		H. Static	3	5.25	1725	0.84	1.15	145TY	4.3 - 5.3	7/8	1VP56	7.9	1	BK85	BX52
ZX	14 (12.5)	Std.	3	2.9	1750	0.87	1.15	56Z	2.8 - 3.8	7/8	1VL44	7.5	1	AK79	A50
		Med.	3	3.7	1750	0.90	1.15	184TZ	3.4 - 4.4	7/8	1VP50	7.5	1	AK79	A52
		H. Static	3	5.25	1750	0.90	1.15	184TZ	4.3 - 5.3	7/8	1VP56	7.9	1	BK85	BX54

Supply Air Drive Adjustment

> **⚠ CAUTION**
>
> Before making any blower speed changes review the installation for any installation errors, leaks or undesirable systems effects that can result in loss of airflow.
>
> Even small changes in blower speed can result in substantial changes in static pressure and BHP. BHP and AMP draw of the blower motor will increase by the cube of the blower speed. Static pressure will increase by the square of the blower speed. Only qualified personnel should make blower speed changes, strictly adhering to the fan laws.

At unit start-up, the measured CFM may be higher or lower than the required CFM. To achieve the required CFM, the speed of the drive may have adjusted by changing the datum diameter (DD) of the variable pitch motor sheave as described below:

$$\left(\frac{\text{Required CFM}}{\text{Measured CFM}}\right) \bullet \text{Existing DD} = \text{New DD}$$

Use the following tables and the DD calculated per the above equation to adjust the motor variable pitch sheave.

EXAMPLE NEW DATUM DIAMETER

A 12.5 ton unit was selected to deliver 4,000 CFM with a 3 HP motor, but the unit is delivering 3,800 CFM. The variable pitch motor sheave is set at 2 turns open.

Use the equation to determine the required DD for the new motor sheave,

$$\left(\frac{4{,}000\ \text{CFM}}{3{,}800\ \text{CFM}}\right) \bullet 4.0\ \text{in.} = 4.21\ \text{in.}$$

Use Table 17 to locate the DD nearest to 4.21 in. Close the sheave to 1 turn open.

New BHP

= (Speed increase)^3 • BHP at 3,800 CFM

= (Speed increase)^3 • Original BHP

= New BHP

New motor Amps

= (Speed increase)^3 • Amps at 3,800 CFM

= (Speed increase)^3 • Original Amps

= New Amps

Table 17: Motor Sheave Datum Diameters

1VL34		1VL44		1VP50		1VP56	
Turns Open	Datum Diameter	Turns Open	Datum Diameter	Turns Open	Datum Diameter	Turns Open	Datum Diameter
0	2.9	0	3.8	0	4.4	0	-
1/2	2.8	1/2	3.7	1/2	4.3	1/2	-
1	2.7	1	3.6	1	4.2	1	5.3
1-1/2	2.6	1-1/2	3.5	1-1/2	4.1	1-1/2	5.2
2	2.5	2	3.4	2	4.0	2	5.1
2-1/2	2.4	2-1/2	3.3	2-1/2	3.9	2-1/2	5.0
3	2.3	3	3.2	3	3.8	3	4.9
3-1/2	2.2	3-1/2	3.1	3-1/2	3.7	3-1/2	4.8
4	2.1	4	3.0	4	3.6	4	4.7
4-1/2	2.0	4-1/2	2.9	4-1/2	3.5	4-1/2	4.6
5	1.9	5	2.8	5	3.4	5	4.5
5-1/2	-	5-1/2	-	5-1/2	-	5-1/2	4.4
6	-	6	-	6	-	6	4.3

> **⚠ CAUTION**
>
> Belt drive blower systems MUST be adjusted to the specific static and CFM requirements for the application. The Belt drive blowers are NOT set at the factory for any specific static or CFM. Adjustments of the blower speed and belt tension are REQUIRED. Verify proper sheave alignment; tighten blower pulley and motor sheave set screws after these adjustments. Re-checking set screws and belt tension after 10-12 hrs. run time is recommended.

Table 18: Additional Static Resistance - ZX08-14

Model	Size Tons	CFM	Cooling Only[1]	Economizer [2 3]	4" Filter[2]	Electric Heat kW[2]							
						6/6.5	9.2/10.5/11	13.8/14/16	16/16.5/17	23	24.8/25.5/27.8	32/33/34	41.7/42.4
ZX	08 (7.5), 09 (8.5), 12 (10.0), 14 (12.5)	2200	0.04	0.11	---	---	---	---	0.07	---	0.09	0.10	0.12
		2600	0.06	0.13	---	---	---	---	0.09	---	0.11	0.12	0.15
		3000	0.10	0.17	---	---	---	---	0.12	---	0.14	0.15	0.19
		3400	0.13	0.20	---	---	---	---	0.15	---	0.18	0.19	0.23
		4800	0.22	0.38	---	---	---	---	0.30	---	0.34	0.35	0.41
		5200	0.24	0.43	---	---	---	---	0.35	---	0.39	0.41	0.47
		5600	0.26	0.46	---	---	---	---	0.41	---	0.45	0.47	0.54
		6000	0.28	0.50	---	---	---	---	0.48	---	0.52	0.54	0.60

1. Add these values to the available static resistance in the respective Blower Performance Tables.
2. Deduct these values from the available external static pressure shown in the respective Blower Performance Tables.
3. The pressure drop through the economizer is greater for 100% outdoor air than for 100% return air. If the resistance of the return air duct is less than 0.25 IWG, the unit will deliver less CFM during full economizer operation.

Figure 21: Unit Control Board

Table 19: Smart Equipment™ UCB Details

Description		Function & Comments
Terminal Directional orientation: viewed with silkscreen labels upright		
Limit, 24 VAC power and shutdown connections from unit wiring harness at left on upper edge of UCB		
LIMIT	Monitored 24 VAC input through heat section limit switch(es)	If voltage is absent, indicating the heat section is over-temperature, the UCB will bring on the indoor blower
C	24 VAC, 75 VA transformer Common referenced to cabinet ground	Connects through circuit traces to thermostat connection strip C and indoor blower VFD pin C
24V	24 VAC, 75 VA transformer hot	Powers the UCB microprocessor, connects through circuit trace to the SD 24 terminal
SD 24	24 VAC hot out for factory accessory smoke detector, condensate overflow and/or user shutdown relay switching in series	Connects through circuit trace to thermostat connection strip SD-24. A wiring harness jumper plug connecting SD 24 to SD R is in place if factory accessories for unit shutdown are not used - this jumper plug must be removed if the switching of field-added external accessories for unit shutdown are wired between thermostat connection strip SD-24 and R
SD R	24 VAC hot return from factory accessory smoke detector, condensate overflow and user shutdown relay switching in series	Connects through circuit trace to the R terminal on the upper left of the board
R	24 VAC hot for switched inputs to the UCB	Connects through circuit trace to the thermostat connection strip R terminal, right FAN OVR pin, right HPS1 pin, right HPS2 pin, lower DFS pin and lower APS pin

Table 19: Smart Equipment™ UCB Details (Continued)

Description		Function & Comments
Terminal Thermostat connection strip on left edge of UCB		
W1	1st stage heating request, 24 VAC input switched from R	Not effective for cooling-only units
W2	2nd stage heating request, 24 VAC input switched from R	Not effective for cooling-only units or units with single-stage heat sections
Y1	1st stage cooling request, 24 VAC input switched from R	
Y2	2nd stage cooling request, 24 VAC input switched from R	Visible in the display menu when the #ClgStgs parameter is set for 2 or more, also effective for economizer free cooling supply air temperature reset when the #ClgStgs parameter is set for 1 or more
G	Continuous indoor blower request, 24 VAC input switched from R	
OCC	Occupancy request, 24 VAC input switched from R	Must have the OccMode parameter set for External to be effective
X	Hard lockout indicator, 24 volt output to a light thermostat LED	
R	24 VAC hot for thermostat switching and power	If field-added external accessories for unit shutdown are used, 24 VAC hot return from smoke detector, condensate overflow and/or user shutdown relay switching in series
SD-24	If field-added external accessories for unit shutdown are used, 24 VAC hot out for smoke detector, condensate over- flow and/or user shutdown relay switching in series	Unit wiring harness jumper plug for factory shutdown accessories must be removed if the switching of field-added external accessories for unit shutdown are wired between thermo- stat connection strip SD-24 and R
C	24 VAC common for thermostat power	
LEDs on left edge of UCB		
POWER	Green UCB power indicator	Lit indicates 24 VAC is present at C and 24V terminals
FAULT	Red hard lockout, networking error and firmware error indicator	1/2 second on/off flashing indicates one or more alarm is currently active, 1/10th second on/off flashing indicates a networking error (polarity, addressing, etc.) or a firmware error (likely correctable with re-loading from USB flash drive)
SA BUS	Green UCB SA bus communication transmission indicator	Lit/flickering indicates UCB SA bus communication is currently active, off indicates the UCB is awaiting SA bus communication
Terminal Space temperature sensor connections at center on upper edge of UCB		
ST	Space Temperature sensor input from 10KΩ @ 77°F, Type III negative temperature coefficient thermistor	Positive of VDC circuit (3.625 VDC reading to COM with open circuit), effective if “Thermo- stat-only Control” parameter is set OFF, space sensor override momentary shorts ST to COM to initiate/terminate temporary occupancy
COM	Common for ST and SSO inputs	Negative of VDC circuit for ST and SSO inputs
SSO	Space Sensor Offset input from 0 to 20KΩ potentiometer	Positive of VDC circuit (3.625 VDC reading to COM with open circuit), 10KΩ/2.5 VDC is 0°F offset, 0Ω/0 VDC is maximum above offset and 20KΩ/3.4 VDC is maximum below offset from active space temperature setpoint
Pin Temperature sensor connections at right on upper edge of UCB		
SAT+	Supply Air Temperature sensor input from 10KΩ @ 77°F, Type III negative temperature coefficient thermistor	Input required for operation; 3.625 VDC reading SAT+ to SAT– with open circuit. Used in heat/cool staging cutouts, free cooling operation, demand ventilation operation, comfort ventilation operation, economizer loading operation, VAV cooling operation, hydronic heat operation.

Table 19: Smart Equipment™ UCB Details (Continued)

Description		Function & Comments
RAT+	Return Air Temperature sensor input from 10KΩ @ 77°F, Type III negative temperature coefficient thermistor	Input required for operation; 3.625 VDC reading RAT+ to RAT– with open circuit. Used in return air enthalpy calculation. Substitutes for space temperature if no other space temperature input is present.
OAT+	Outside Air Temperature sensor input from 10KΩ @ 77°F, Type III negative temperature coefficient thermistor	Input required for operation but may be a communicated value; 3.625 VDC reading OAT+ to OAT– with open circuit. Used in heat/cool cutouts, low ambient cooling determination, dry bulb free cooling changeover, outside air enthalpy calculation, economizer loading operation, heat pump demand defrost calculation.
CC1+	#1 refrigerant circuit Condenser Coil temperature sensor input from 10KΩ @ 77°F, Type III negative temperature coefficient thermistor	Input required for heat pump units, not required for A/C units; 3.625 VDC reading CC1+ to CC1– with open circuit. Used in heat pump demand defrost calculation.
EC1+	#1 refrigerant circuit Evaporator Coil temperature sensor input from 10KΩ @ 77°F, Type III negative temperature coefficient thermistor	Input required for operation; 3.625 VDC reading EC1+ to EC1– with open circuit. Used in suction line temperature safety.
CC2+	#2 refrigerant circuit Condenser Coil temperature sensor input from 10KΩ @ 77°F, Type III negative temperature coefficient thermistor	Input required for 2-compressor heat pump units, not required for 2-compressor A/C units, not active for 1-compressor units; 3.625 VDC reading CC2+ to CC2– with open circuit. Used in heat pump demand defrost calculation.
EC2+	#2 refrigerant circuit Evaporator Coil temperature sensor input from 10KΩ @ 77°F, Type III negative temperature coefficient thermistor	Input required for operation of 2-compressor units, not active for 1-compressor units; 3.625 VDC reading EC2+ to EC2– with open circuit. Used in suction line temperature safety.
Pinned connections on right edge of UCB		
RAH+	Return Air Humidity input from 0-10 VDC @ 0-100% RH sensor	Input required for reheat units, optional in all other units, may be a communicated value. Used in return air enthalpy calculation, temperature/humidity setpoint reset, reheat operation.
DCT PRS+	Supply Duct Pressure input from 0-5 VDC @ 0-5" w.c. sensor	Input required for variable air volume units. Used in VAV indoor blower operation.
DFS (upper pin)	24 VAC hot return from Dirty Filter Switch	Optional input; switch closure for greater than 15 seconds during indoor blower operation initiates a notification alarm
DFS (lower pin)	24 VAC hot out for Dirty Filter Switch	Connects through circuit trace to the R terminal
APS (upper pin)	24 VAC hot return from Air Proving Switch	When this optional input is enabled: the air proving switch must close within 30 seconds of initiation of indoor blower operation and not open for greater than 10 seconds during in- door blower operation to allow heat/cool operation and prevent an "APS open" alarm; the air proving switch must open within 30 seconds of termination of indoor blower operation to prevent an "APS stuck closed" notification alarm
APS (lower pin)	24 VAC hot out for Air Proving Switch	Connects through circuit trace to the R terminal
C	Common for the VFD output	Negative of the VDC circuit for the VFD output
VFD	2-10 VDC (0-100%) output for the indoor blower Variable Frequency Drive	Output is active with indoor blower operation. For CV units: this output provides stepped IntelliSpeed control of the indoor blower VFD based on fan-only, cooling stage and heating stage outputs. For VAV units: this output provides control of the indoor blower VFD based on supply duct static pressure input and setpoint.

Table 19: Smart Equipment™ UCB Details (Continued)

Description		Function & Comments
VFDFLT	24 VAC hot input from the normally open VFD alarm contact	The VFD alarm contact switches from R within the unit wiring harness. 24 VAC input re- sults in unit shutdown and a “VFD fault” alarm
Terminal at lower right corner of UCB		
24V FOR OUTPUTS	24 VAC hot for H1, H2, CN-FAN, AUX HGR, FAN C1 and C2 output relay contact switching	Output relay circuitry is isolated from other UCB components and the 24 VAC hot source may be from a second transformer in the unit
Pin Heat section connections at right on lower edge of UCB		
H1	24 VAC hot output for heat section stage 1	Not effective for cooling-only units. Output if demand is present and permissions allow one stage or two stages of heat section operation
H2	24 VAC hot output for heat section stage 2	Not effective for cooling-only units or units with single-stage heat sections. Output if demand is present and permissions allow two stages of heat section operation
MV	24 VAC hot input confirming heat section operation	Sourced from gas valve in gas heat units or first stage heat contactor in electric heat units. Input within 5 minutes from initiation of H1 output initiates the “Heat On Fan Delay” timer, loss of input following the termination of H1 output initiates the “Heat On Fan Delay” timer, no input within 5 minutes from initiation of H1 output initiates an “Ignition Failure” alarm, input for longer than 5 minutes without H1 output initiates a “Gas Valve Mis-wire” alarm
Pin Cooling and fan output connections at right on lower edge of UCB		
CN-FAN	24 VAC hot output for the condenser fan contactor coil	Output with either C1 or C2 output; interrupted during defrost cycle for heat pump units
AUX HGR	24 VAC hot output for hot gas reheat components	Effective only for reheat units, output with reheat operation
FAN	24 VAC hot output for indoor blower contactor coil/ indoor blower VFD enable relay coil	Output with heat/cool operation, G input or schedule demand
C1	24 VAC hot output for compressor 1	If demand is present and permissions allow compressor 1 operation; output with compressor cooling, comfort ventilation cooling, reheat or heat pump heating demands
C2	24 VAC hot output for compressor 2	Not effective for one stage compressor UCBs. If demand is present and permissions allow compressor 2 operation; output with compressor cooling, comfort ventilation cooling or heat pump heating demands
Pin Refrigerant circuit safety switch and indoor blower overload connections at center on lower edge of UCB		
HPS1 (right pin)	24 VAC hot out for refrigerant circuit 1 High Pressure Switch	Connects through circuit trace to the R terminal
HPS1 (left pin)	24 VAC hot return from refrigerant circuit 1 High Pressure Switch	Input is only considered if C1 output is needed; input must be present to allow C1 output. Three HPS1 trips in a two hour period cause a “High Pressure Switch 1 Lockout” and C1 output is then prevented until alarm reset. Connects through circuit trace to the right LPS1 pin.
LPS1 (right pin)	24 VAC hot out for refrigerant circuit 1 Low Pressure Switch	Connects through circuit trace to the left HSP1 pin
LPS1 (left pin)	24 VAC hot return from refrigerant circuit 1 Low Pressure Switch	Input is only considered after 30 seconds of C1 output; afterwards, input must be present to allow C1 output. Three LPS1 trips in a one hour period cause a “Low Pressure Switch 1 Lockout” and C1 output is then prevented until alarm reset.
HPS2 (right pin)	24 VAC hot out for refrigerant circuit 2 High Pressure Switch	Not effective for one stage compressor UCBs. Connects through circuit trace to the R terminal

Table 19: Smart Equipment™ UCB Details (Continued)

Description		Function & Comments
HPS2 (left pin)	24 VAC hot return from refrigerant circuit 2 High Pressure Switch	Not effective for one stage compressor UCBs. Input is only considered if C2 output is needed; input must be present to allow C1 output. Three HPS2 trips in a two hour period cause a “High Pressure Switch 1 Lockout” and C2 output is then prevented until alarm reset. Connects through circuit trace to the right LPS2 pin.
LPS2 (right pin)	24 VAC hot out for refrigerant circuit 2 Low Pressure Switch	Not effective for one stage compressor UCBs. Connects through circuit trace to the left HSP2 pin
LPS2 (left pin)	24 VAC hot return from refrigerant circuit 2 Low Pressure Switch	Not effective for one stage compressor UCBs. Input is only considered after 30 seconds of C2 output; afterwards, input must be present to allow C2 output. Three LPS2 trips in a one hour period cause a “Low Pressure Switch 2 Lockout” and C2 output is then prevented until alarm reset.
FAN OVR (right pin)	24 VAC hot out for indoor blower FAN Overload relay contact/motor protector switch	Connects through circuit trace to the R terminal
FAN OVR (left pin)	24 VAC hot return from indoor blower FAN Overload relay contact/motor protector switch	Input is only considered if FAN output is needed; input must be present to allow FAN output and unit operation. One FAN OVR trip lasting longer than 5 minutes or three FAN OVR trips in a two hour period cause a “Fan Overload Lockout” and unit operation is then prevented until alarm reset.
Terminal SA BUS[1] connections on at left on lower edge and center of UCB		
PWR	Power for SA (“Sensor-Actuator”) BUS devices	Also incorporated in the J8 6-pin phone jack connector at the left-center of the board. Positive of the 15 VDC (reading to C) circuit for powering an optional netstat and/or Multi Touch gateway
C	Common for SA BUS power and communication circuits	Also incorporated in the J8 6-pin phone jack connector at the left-center of the board. Negative of the SA BUS circuits
–	Communication for SA BUS devices	Also incorporated in the J8 6-pin phone jack connector at the left-center of the board. Positive of the VDC (typically, a fluctuating 1.5 to 3.5 volts reading to C; at least 0.25 volts lower than +) SA BUS communication circuit to optional economizer board, 4-stage board, fault detection & diagnostics board, netstat and/or Multi Touch gateway
+	Communication for SA BUS devices	Also incorporated in the J8 6-pin phone jack connector at the left-center of the board. Positive of the VDC (typically, a fluctuating 1.5 to 3.5 volts reading to C; at least 0.25 volts higher than –) SA BUS communication circuit to optional economizer board, 4-stage board, fault detection & diagnostics board, netstat and/or Multi Touch gateway
J8	6-pin phone jack connector	Incorporates the SA BUS terminals for convenience/alternate connection of SA BUS devices, primarily used for temporary service connection of the Multi Touch gateway
Item Integrated user interface at lower left corner of UCB		
Display	On-board, 2-line x 8-character back-lit display	On-board display, buttons and joystick allow access to UCB, economizer, 4-stage and FDD board parameters
ENTER	Button for display menu acknowledgment and navigation	
CANCEL	Button for display menu navigation and zeroing of active compressor ASCD timer	
JOY	4-way Joystick for display menu navigation	
Item USB connector at right of UCB		
J10	Type A female Universal Serial Bus connector	Used for backup, restoration, & copying of board parameters as well as board software updating through a flash drive

Table 19: Smart Equipment™ UCB Details (Continued)

Description		Function & Comments
J15	Factory wired SA Bus connector	
Optional communication sub-board at center of UCB		
Terminal FC BUS[1] connections on left edge of the communication board		
FC+	FC (“Field Connected”) BUS BACnet MSTP communication	Positive of the VDC (typically, a fluctuating 1.5 to 3.5 volts reading to COM; at least 0.25 volts higher than –) FC bus BACnet MSTP communication circuit
FC–	FC (“Field Connected”) BUS BACnet MSTP communication	Positive of the VDC (typically, a fluctuating 1.5 to 3.5 volts reading to COM; at least 0.25 volts lower than +) FC bus BACnet MSTP communication circuit
COM	Common for the FC (“Field Connected”) BUS BACnet MSTP communication circuit	Negative of the VDC FC bus BACnet MSTP communication circuit
SHLD	Shield for the FC (“Field Connected”) BUS BACnet MSTP communication circuit	Earth ground reference of the cable to prevent interference on the FC bus BACnet MSTP communication circuit
Item Selector in red housing at left on top edge of the communication board		
EOL switch	End Of Line selector switch for the FC BUS BACnet MSTP communication circuit	ON selected only for the UCB that is the terminus of the FC bus BACnet MSTP communication cable to prevent signal “bounce-back”
LEDs on the communication board		
EOL	Green End Of Line indicator	Lit indicates the EOL switch is selected ON
FC BUS	Green FC bus communication transmission indicator	Lit/flickering indicates outgoing UCB FC bus communication is currently active, off indicates the UCB is awaiting incoming FC bus communication
ISO PWR	Green communication board Isolated Power indicator	Lit indicates the UCB is supplying power to the communication sub-board

1. When wiring unit and other devices using the SA Bus and FC Bus, see Table 20.

Table 20: Cable for FC Buses and SA Buses in Order of Preference

Bus and Cable Type	Non-Plenum Applications		Plenum Applications	
	Part Number	O.D.	Part Number	O.D.
FC Bus: 22 AWG Stranded, 3-Wire Twisted Shielded Cable[1]	Anixter: CBL-22/3-FC-PVC Belden®: B5501FE	0.138 in.	Anixter: CBL-22/3-FC-PLN Belden: B6501FE	0.140 in.
SA Bus (Terminal Block): 22 AWG Stranded, 4-Wire, 2 Twisted-Pair Shielded Cable	Anixter: CBL-22/2P-SA-PVC Belden: B5541FE	0.209 in.	Anixter: CBL-22/2P-SA-PLN Belden: B6541FE	0.206 in.
SA Bus (Modular Jack): 26 AWG Solid 6-Wire, 3 Twisted-Pair Cable[2]	—	—	Anixter preassembled: CBL-NETWORK25 CBL-NETWORK50 CBL-NETWORK75 CBL-NETWORK100	0.15 in.
FC Bus: 22 AWG Stranded, 3-Wire Twisted Non-Shielded Cable	Belden: B5501UE	0.135 in.	Belden: B6501UE	0.131 in.
SA Bus (Terminal Block): 22 AWG Stranded, 4-Wire, 2 Twisted-Pair Non-Shielded Cable	Belden: B5541UE	0.206 in.	Belden: B6541UE	0.199 in.

1. We strongly recommend 3-wire (for FC bus) and 4-wire, 2 twisted-pair (for SA bus), 22 AWG stranded, shielded cable. A 22 gauge cable offers the best performance for various baud rates, cable distances, and number of trunk devices primarily due to lower conductor-to-conductor capacitance. Shielded cable offers better overall electrical noise immunity than non-shielded cable. Observe the shield grounding requirements.
2. We recommend 26 AWG solid, 6-wire (3 twisted pairs) cable as the best fit for fabricating modular cables with the modular jack housing assembly. Be sure the cable you use fits the modular jack housing. The preassembled cables that are available from Anixter (Part No. CBL-NETWORKxxx) use 24 gauge wire.

Operation

Compressor Operation

Compressor Operation details include:

a. Compressors are controlled by the Y1 through Y2 thermostat inputs. If the Lead/Lag function is turned OFF, a Y1 input energizes the C1 output when the compressor number 1 anti-short cycle delay is at 0 and all refrigerant safety devices are closed (Default 5 minutes).

b. The FAN output for indoor fan operation energizes with any cooling output after the Indoor Fan Cool On Delay expires.

c. When the thermostat cooling inputs are lost **and** the minimum runtime expires, the compressor outputs stage off (Default 3 minutes).

d. A 30 second interstage delay occurs when multiple stages are requested.

NOTE: A Y2 input without a Y1 input energizes a C1 first and then C2 30 seconds later.

IntelliSpeed Supply Fan Control

1. Setpoints and related data
   - Fan Control Type Fixed Variable
   - Occupied, No Heat Or Cool % Command 0-100%
   - Occupied, One Stage of Cool % Command 0-100%
   - Occupied, Two Stage of Cool % Command 0-100%
   - Occupied, One Stage of Heat % Command 0-100%
   - Occupied, Two Stage of Heat % Command 0-100%
   - Economizer Minimum Position 0-100%
   - Economizer Minimum Position for Low Speed Fan 0-100%
2. Outputs
   - 24 VAC from FAN on Unit Control Board (UCB) to enable VFD.
   - 2-10 VDC from VFD terminal on UCB for controlling speed of the VFD drive.
3. VFD Operation
   - 2-10vdc output from VFD terminal on UCB will operate supply fan VFD proportional to the min and max frequency settings of VFD drive (defaults 25hz - 60hz)
4. Supply Fan Only Operation
   - When there is no demand for heating or cooling, the supply fan to run operate at the percent output that relates to the "No Heat Or Cool % Command" setpoint.
5. Cooling Supply Fan Operation
   - With a demand for Cooling Stage 1 only, VFD will operate at the frequency relating to setpoint "Occupied, One Stage of Cool % Command"
   - With a demand for Two Cooling Stages, VFD will operate at the frequency relating to setpoint "Occupied, One Stage of Cool % Command"

Economizer Sequences

Several functions can drive the economizer, including: minimum position, free cooling, economizer loading, and minimum outdoor air supply.

Economizer Minimum Position

The economizer minimum position is set during occupied mode when outside air is not suitable for free cooling. The position of the damper is set proportionally between the "Economizer Minimum Position and the Economizer Minimum Position Low Speed Fan" set points, in relationship to the VFD output percentage. On a constant volume single speed supply fan system both set-points should be set to the same value.

Free Cooling

Four types of free cooling options are available: dry bulb changeover, single enthalpy, dual enthalpy changeover, and Auto.

Dry Bulb Changeover

For dry bulb economizer operation, the outside air is suitable for free cooling if the outside air temperature is 1°F below the Economizer OAT Enable Setpoint **and** 1°F below the Return Air Temperature.

Free cooling is no longer available if the outside air temperature rises above **either** the Economizer OAT Enable setpoint **or** the return air temperature.

Single Enthalpy Changeover

For single enthalpy economizer operation, the outside air is suitable for free cooling if the outside air enthalpy is at least 1 BTU/lb below the Economizer Outside Air Enthalpy Setpoint **and** the outside air temperature is no greater than the RAT plus 9°F.

If the outside air temperature rises above the RAT plus 10°F, free cooling is no longer available. The outside air temperature must drop to no greater than RAT plus 9°F to enter free cooling again.

Free cooling is no longer available if the outside air enthalpy rises above the Economizer Outside Air Enthalpy Setpoint.

Dual Enthalpy Changeover

For dual enthalpy economizer operation, the outside air enthalpy must be lower than the return air enthalpy by 1 btu/lb AND the outside air temperature is no greater than the RAT plus 9°F.

Auto

The control determines the type of free cooling changeover based on which sensors are present and reliable. Conditions include:

- Return and outside air dry bulb = dry bulb changeover
- Return and outside air dry bulb and outside air humidity = single enthalpy
- Return and outside air dry bulb and return and outside air humidity = dual enthalpy
- If either the return or outside air dry bulb sensors are unreliable, free cooling is not available

Free Cooling Operation

When the control determines that the outside air is suitable, the first stage of cooling will always be free cooling.

Thermostat

In free cooling, with a thermostat input to Y1, the dampers modulate to control the supply air temperature to the Economizer Setpoint +/- 1°F (default 55°F).

If the thermostat provides an input to Y2 **and** the parameter Compressors Off in Free Cooling is turned OFF a compressor output energizes. The economizer dampers continue to modulate to control the supply air temperature to the Economizer Setpoint.

If the supply air temperature cannot be maintained within 5°F of the economizer setpoint, the first stage compressor (C1) will be turned on. Second stage compressor (C2) will be added as needed to keep the supply air temperature within the 5°F of the economizer setpoint.

Sensor

In free cooling, with a demand from the zone/return sensor for the first stage of cooling, the dampers modulate to control the supply air temperature to the Economizer Setpoint +/- 1°F.

If the economizer output is at 100% **and** the SAT is greater than the Economizer setpoint + 1°F, the control starts a 12-minute timer to energize a compressor output.

If at any time the economizer output drops below 100% the timer stops and resets when the economizer output returns to 100%.

Once a compressor output is turned ON, the economizer dampers continue to modulate to control the supply air temperature to the Economizer Setpoint.

At no time will a compressor output be turned ON if the economizer output is less than 100%, even if the differential between zone (or return) temperature and the current cooling setpoint is great enough to demand more than one stage of cooling.

If the economizer output goes to minimum position **and** the SAT is less than Economizer Setpoint -1°F, the control starts a 12-minute timer to de-energize a compressor output.

If at any time the economizer output goes above the minimum position the timer stops and resets when the economizer output returns to minimum position.

If the demand for cooling from the space/return is satisfied, the economizer output will modulate to minimum position and the compressor outputs will be de-energized as long as their minimum run timers have expired.

Economizer Loading

Power Exhaust

Setpoints

a. Economizer Enable ON
b. Power Exhaust Enable ON
c. Modulating Power Exhaust OFF
d. Exhaust VFD Installed OFF
e. Building Pressure Sensor Enabled OFF
f. Econo Damper Position For Exh Fan ON Percent
g. Econo Damper Position For Exh Fan OFF Percent

Inputs

No inputs are present for non-modulating power exhaust.

Outputs

a. 2-10 VDC from ECON on Economizer Expansion module
b. 24 VAC from EX-FAN to energize exhaust fan on Economizer Expansion module

Operation

Operation details include:

a. Compares economizer output to the Economizer Damper Position For Exhaust Fan On and OFF.
b. Energizes exhaust fan when economizer output is above Economizer Damper Position For Exhaust Fan On.
c. De-energizes exhaust fan when economizer output is below the Economizer Damper Position for Exhaust Fan OFF

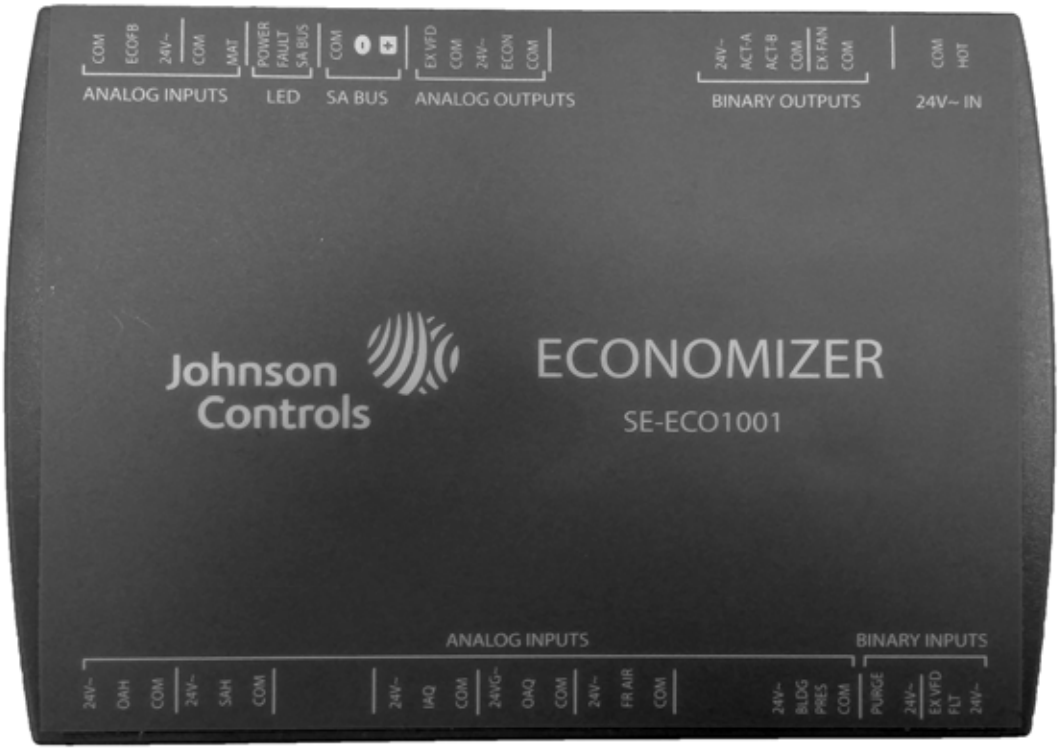

Figure 22: SE-ECO1001-1 Economizer Controller

Table 21: Smart Equipment™ Economizer Board Details

Board Label	Cover Label	Description	Function & Comments
		Directional orientation: viewed with the center text of the cover label upright	
		ANALOG INPUTS Terminal at left on upper edge of economizer board	
C	COM	24 VAC common/0-10 VDC negative for economizer actuator position feedback	Connects through circuit trace to 24V~ IN pin COM
IN2	ECOFB	0-10 VDC positive input from Economizer actuator position Feedback	EconDampPos parameter reports input status (0-100%). Used to meet Cali. Title 24 requirements for economizer actuator position feedback
R	24V~	24 VAC hot supplied for economizer actuator position feedback	Connects through circuit trace to 24V~ IN pin HOT
C	COM	Mixed Air Temperature sensor input from 10KΩ @ 77°F, Type III negative temperature coefficient thermistor	MAT parameter reports input status (°F/°C), 3.65 VDC reading MAT (+) to COM (−) with open circuit. Read-only use in current control revision.
IN1	MAT		
		LEDs at left on upper edge of economizer board	
POWER	POWER	Green UCB power indicator	Lit indicates 24 VAC is present at 24V~ IN COM and HOT pins
FAULT	FAULT	Red networking error and firmware error indicator	1/10th second on/off flashing indicates a networking error (polarity, addressing, etc.) or a firmware error (likely correctable with re-loading from USB flash drive)
SA BUS	SA BUS	Green UCB SA bus communication transmission indicator	Lit/flickering indicates UCB-to-economizer board SA bus communication is currently active, off indicates the economizer board is awaiting SA bus communication

Table 21: Smart Equipment™ Economizer Board Details (Continued)

Board Label	Cover Label	Description	Function & Comments
		SA BUS[1] Pin connections at left on upper edge of economizer board	
C	COM	Common for SA BUS power and communication circuits	EconCtrlr parameter reports UCB-to-economizer board SA bus communication status. Negative of the SA BUS communication circuit to the UCB. Through the unit wiring harness, may continue on to the 4-stage board and/or fault detection & diagnostics board
–	–	Communication for SA BUS devices	EconCtrlr parameter reports UCB-to-economizer board SA BUS communication status. Positive of the VDC (typically, a fluctuating 1.5 to 3.5 volts reading to C; at least 0.25 volts lower than +) SA BUS communication circuit to the UCB. Through the unit wiring harness, may continue on to the 4-stage board and/or fault detection & diagnostics board
+	+	Communication for SA BUS devices	EconCtrlr parameter reports UCB-to-economizer board SA BUS communication status. Positive of the VDC (typically, a fluctuating 1.5 to 3.5 volts reading to C; at least 0.25 volts higher than –) SA BUS communication circuit to the UCB. Through the unit wiring harness, may continue on to the 4-stage board and/or fault detection & diagnostics board
		ANALOG OUTPUTS Pin at center on upper edge of economizer board	
J4	EX VFD	2-10 VDC positive output for the modulating power Exhaust fan Variable Frequency Drive/ discharge damper modulating power exhaust actuator	ExFanVFD parameter reports output status (0-100%) when ExFType selection is Variable Frequency Fan; EAD-O parameter reports output status (0-100%) when ExFType selection is Modulating Damper. Used to ramp the power exhaust fan VFD/ position the discharge damper actuator.
	COM	24 VAC common/0-10 VDC negative for the power exhaust variable frequency drive/ discharge damper modulating power exhaust actuator	Connects through circuit trace to 24V~ IN pin COM
	24V~	24 VAC hot supplied for the discharge damper modulating power exhaust actuator and economizer actuator	Connects through circuit trace to 24V~ IN pin HOT
	ECON	2-10 VDC output for the Economizer actuator	Econ parameter reports output status (0-100%). Used to position the economizer actuator for minimum position, free cooling, demand ventilation, cooling economizer loading and purge functions
	COM	24 VAC common/0-10 VDC negative for economizer actuator	Connects through circuit trace to 24V~ IN pin COM
		BINARY OUTPUTS Pin at right on upper edge of economizer board	
J3	24V~	24 VAC hot supplied for an incremental (floating control) economizer actuator	Connects through circuit trace to 24V~ IN pin HOT
	ACT-A	24 VAC hot outputs to position an incremental (floating control) economizer actuator	Unused in current control revision
	ACT-B	24 VAC return	Unused in current control revision
	COM	24 VAC common for an incremental (floating control) economizer actuator	Connects through circuit trace to 24V~ IN pin COM
	EX-FAN	24 VAC hot output to energize power exhaust fan contactor coil/VFD enable relay coil	ExFan parameter reports output status (Off-On) when ExFType selection is Non-Modulating, Modulating Damper or Variable Frequency Fan. Used to turn on/enable the power exhaust fan motor.
	COM	24 VAC common/0-10 VDC negative for economizer actuator	Connects through circuit trace to 24V~ IN pin COM

Table 21: Smart Equipment™ Economizer Board Details (Continued)

Board Label	Cover Label	Description	Function & Comments
		24V~ IN Pin connections at right on upper edge of economizer board	
C	COM	24 VAC transformer Common referenced to cabinet ground	24 VAC common connection to power the economizer board. Connects through circuit traces to C/COM terminals and pins distributed on the economizer board.
R	HOT	24 VAC transformer HOT	24 VAC hot connection to power the economizer board. Connects through circuit traces to R/24V~ terminals and pins distributed on the economizer board.
		ANALOG INPUTS Terminal on lower edge of economizer board	
R	24V~	24 VAC hot supplied for the outdoor air humidity sensor	Connects through circuit trace to 24V~ IN pin HOT
IN3	OAH	0-10 VDC positive input from the Outdoor Air Humidity sensor	OAH parameter reports input status (0-100%H). Used in outdoor air enthalpy calculation for dual enthalpy economizer free cooling changeover.
C	COM	24 VAC common/0-10 VDC negative for the outdoor air humidity sensor	Connects through circuit trace to 24V~ IN pin COM
R	24V~	24 VAC hot supplied for the supply air humidity sensor	Connects through circuit trace to 24V~ IN pin HOT
IN4	SAH	0-10 VDC positive input from the Supply Air Humidity sensor	SAH parameter reports input status (0-100%H). Unused in current control revision.
C	COM	24 VAC common/0-10 VDC negative for the supply air humidity sensor	Connects through circuit trace to 24V~ IN pin COM
R	24V~	24 VAC hot supplied for the indoor air quality sensor	Connects through circuit trace to 24V~ IN pin HOT
IN5	IAQ	0-10 VDC positive input from the Indoor Air Quality sensor	IAQRange parameter sets the CO2 parts per million measured by the indoor air quality sensor when it outputs 10 VDC; IAQ parameter reports input status (0-5000ppm). Used for demand ventilation functions if the NetIAQ parameter indicates ?Unrel.
C	COM	24 VAC common/0-10 VDC negative for the indoor air quality sensor	Connects through circuit trace to 24V~ IN pin COM
R	24V~	24 VAC hot supplied for the outdoor air quality sensor	Connects through circuit trace to 24V~ IN pin HOT
IN6	OAQ	0-10 VDC positive input from the Outdoor Air Quality sensor	OAQRange parameter sets the CO2 parts per million measured by the outdoor air quality sensor when it outputs 10 VDC; OAQ parameter reports input status (0-5000ppm). Used for demand ventilation function when DVent-Mode selection is Diff between IAQ and OAQ and the NetOAQ parameter indicates ?Unrel.
C	COM	24 VAC common/0-10 VDC negative for the outdoor air quality sensor	Connects through circuit trace to 24V~ IN pin COM
R	24V~	24 VAC hot supplied for the air monitoring station sensor	Connects through circuit trace to 24V~ IN pin HOT
IN7	FR AIR	0-10 VDC positive input from the air monitoring station sensor	MOA-Range parameter sets the cubic feet per minute/liters per second measured by the air monitoring station sensor when it outputs 10 VDC; Fr Air parameter reports input status (0-50000CFM/23595lps). Used for economizer minimum position reset in speed-controlled indoor blower applications.
C	COM	24 VAC common/0-10 VDC negative for the air monitoring station sensor	Connects through circuit trace to 24V~ IN pin COM

Table 21: Smart Equipment™ Economizer Board Details (Continued)

Board Label	Cover Label	Description	Function & Comments
R	24V~	24 VAC hot supplied for the building pressure sensor	Connects through circuit trace to 24V~ IN pin HOT
IN8	BLDG PRES	0-5 VDC positive input from the Building Pressure sensor	BldgPres parameter reports input status (-.250-.250"/w/-.062-.062kPa). Used for modulating power exhaust functions when ExFType selection is Modulating Damper or Variable Frequency Fan.
C	COM	24 VAC common/0-5 VDC negative for the building pressure sensor	Connects through circuit trace to 24V~ IN pin COM
		BINARY INPUTS at right on lower edge of economizer board	
IN9	PURGE	24 VAC hot input from the PURGE dry contact	Purge parameter reports input status (False with 0 VAC input-True with 24 VAC input). When Purge status is True, heating and cooling operation is prevented, the indoor blower and power exhaust fan operate, the economizer actuator is positioned to 100%.
	24V~	24 VAC hot supplied for the purge dry contact	Connects through circuit trace to 24V~ IN pin HOT
IN10	EX VFD FLT	24 VAC hot input from the power Exhaust Variable Frequency Drive Fault contact	ExFanVFDFlt parameter reports input status (Normal with 0 VAC input-Alarm with 24 VAC input) when ExFType selection is Variable Frequency Fan. When ExFanVFDFlt status is Alarm, EX-FAN fan output is prevented.
	24V~	24 VAC hot supplied for the power exhaust variable frequency drive fault contact	Connects through circuit trace to 24V~ IN pin HOT

1. When wiring unit and other devices using the SA Bus and FC Bus, see Table 24.

Indoor Air Quality AQ

Indoor Air Quality (indoor sensor input): Terminal AQ accepts a +2 to +10 VDC signal with respect to the (AQ1) terminal. When the signal is below it's set point, the actuator is allowed to modulate normally in accordance with the enthalpy and mixed air sensor inputs. When the AQ signal exceeds it's set point setting and there is no call for free cooling, the actuator is proportionately modulated from the 2 to 10 VDC signal, with 2 VDC corresponding to full closed and 10 VDC corresponding to full open. When there is no call for free cooling, the damper position is limited by the IAQ Max damper position setting. When the signal exceeds it's set point (Demand Control Ventilation Set Point) setting and there is a call for free cooling, the actuator modulates from the minimum position to the full open position based on the highest call from either the mixed air sensor input or the AQ voltage input.

- Optional CO_2 Space Sensor Kit Part # 2AQ04700524B
- Optional CO_2 Sensor Kit Part # 2AQ04700624C

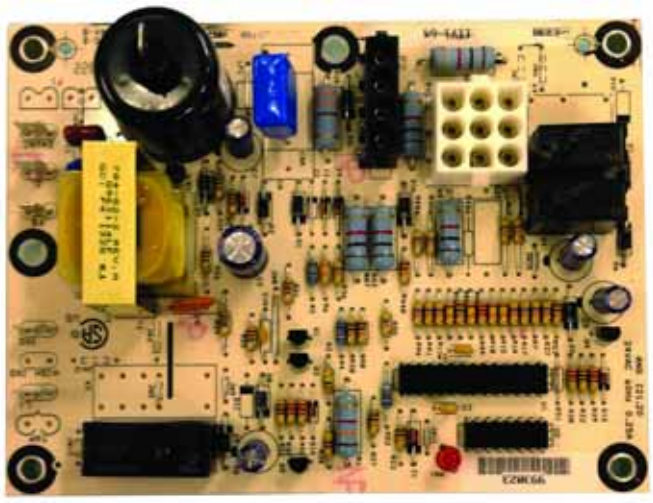

Figure 23: Ignition Control Board

Gas Heating Operation

a. Heating stages are controlled by the W1 through W2 thermostat inputs. A W1 or W2 input energizes a H1 or H1/H2 output.

b. When the pre-ignition process is complete the ignition module energizes the gas valve and provides a 24 V input to the MV terminal on the UCB.

c. The FAN ON HEAT DELAY timer starts as soon as 24 V is present on MV terminal. When the timer expires the FAN output for the indoor fan operation energizes. If 24 V is not received on the MV terminal within 6 minutes, an alarm appears and the fan output energizes immediately and remains On until the alarm clears.

d. When the thermostat heat inputs are lost **and** the 120 second Minimum Heat Run Timers have expired, heating outputs stage off. The FAN OFF HEAT DELAY timer starts when 24 V is removed from the MV terminal. When the timer expires, the FAN output for the indoor fan operation de-energizes.

NOTE: If 24 V is lost on the MV terminal during the same heat cycle, an alarm appears and the fan output energizes **and** remains On until 24 V is present again on the MV terminal.

NOTE: If 24 V is present on the MV terminal without a call for heat, an alarm appears and the fan output energizes. If this condition occurs for 6 minutes an alarm appears, and remains, until the alarm condition is cleared.

e. At any time, if 24 V is lost on the LIMIT terminal, the FAN output for indoor fan operation is energized. If 24 V is lost on the LIMIT input 3 times in 1 hour, an alarm appears and the FAN output is energized. The heating H1 and H2 outputs are de-energized until the alarm is cleared.

Gas Heat Ignition Control Board Function

Ignition Control Board on Standby

The Ignition Control Board (ICB) has all outputs de-energized and monitors the thermostat and flame sense. The ICB resets ignition trial and flame loss counters. The ICB begins a call for heat when W1 is energized at the Unit Control Board (UCB). The ICB ignores W2 until ignition has been established.

Call for heat

The ICB checks to see if the pressure switch is open. If the pressure switch is closed, the ICB flashes "3" on the LED and waits indefinitely for it to open. When the pressure switch is sensed as open, the ICB begins pressure switch proving period. If the call for heat is lost, the ICB goes back to Standby.

Pressure switch proving

The ICB energizes the induced draft motor and waits for the low pressure switch to close. When the low pressure switch closes, the control begins Pre-purge period. If the call for heat is lost, the control de-energizes the inducer without post-purge and returns to standby.

If the low pressure switch does not close within 10 seconds of inducer energizing, the control flashes "2" on the LED. If the pressure switch does not close within 5 minutes of inducer energizing, the control shuts off the inducer for 30 seconds, then energizes the inducer for another 5 minute try to close the pressure switch. This cycle continues indefinitely until either the pressure switch is proved closed, or the call for heat ends.

Pre-purge

The ICB monitors the low pressure switch and ensures it remains closed during pre-purge. If the pressure switch opens, the control goes back to pressure switch proving mode. The control waits for a 15 second pre-purge period, then begins the ignition trial.

Ignition trial period

The ICB energizes the main gas valve, second stage gas valve and spark outputs for a 10 second Ignition trial. The control de-energizes the spark when flame is sensed and enters a flame stabilization period.

If flame is not established within the ignition trial period, the control de-energizes the spark and gas valve and checks for maximum number of ignition trials. The ICB has a maximum number of 3 ignition trials. If the control has attempted the maximum number of ignition trials within the same call for heat without flame, the control will lockout flashing "4" on the LED. If the control has attempted less than maximum ignition trials, it begins an inter-purge period before attempting another ignition trial.

If the call for heat is lost during an ignition trial period, the control immediately de-energizes spark and gas. The control runs the inducer motor through a post purge period before de-energizing.

If the pressure switch is lost during an ignition trial period, the control immediately de-energizes spark and gas. The control begins pressure switch proving before an inter-purge and re-ignition attempt.

Flame stabilization period

If a flame is detected during the Ignition Trial Period, the ICB then enters the flame stabilization period. If a flame is not detected in 2 seconds, the main valve is de-energized and a retry operation begins. The flame stabilization period lasts 10 seconds. flame detection must be lost for 2 seconds during flame stabilization for the main valve to be de-energized. When the flame stabilization period has ended, a loss of flame detection for 3/4 seconds will result in the main valve being de-energized.

If flame is lost during the flame stabilization period, the control counts it as a flame loss and retries ignition or locks out as described in Low heat section.

Main Burner operation

High heat warm-up

Two stage models run high heat for the first 30 seconds following flame stabilization period regardless of W2 demand. If W2 is not energized at the end of this 30 second period the control de-energizes the high gas output. If W2 is energized the control remains on high heat.

Low heat

The ICB keeps the main gas valve and induced draft motor energized while continuously monitoring the call for heat, low pressure switch, and flame status.

If the call for heat (W1) is lost, the control de-energizes the gas valve and begins post purge.

If low pressure switch opens, the control de-energizes the gas valve and begins pressure switch proving mode.

If flame is lost, the control de-energizes the gas valve within 2.0 second and counts the flame loss. If flame has been lost more than 5 times within the same call for heat, the control locks out flashing "5" on the LED. If flame has been lost less than 5 times, the control attempts re-ignition after a 30 second inter-purge period.

High heat

The ICB recognizes a call for 2nd stage heat when W2 is energized. The control energizes the high gas output.

If the call for 2nd stage heat goes away and the 1st stage call remains, the control de-energizes the high gas valve and returns to low heat operation.

Response to loss of W1, low pressure switch, and flame are identical to low heat operation.

Post Purge

The ICB runs the induced draft motor for a 5 second post-purge period, then de-energizes the inducer. If a call for heat occurs during post-purge, the control finishes the post-purge, drops inducer out to re-prove open pressure switch before continuing with the heat cycle.

Lockout

While in lockout, the ICB keeps the main gas valve and induced draft motor de-energized.

Lockouts due to failed ignition or flame losses may be reset by removing the call for heat (W1) for more than 1 second, but less than 20 seconds, or by removing power from the control for over 0.25 seconds. The control will automatically reset lockout after 60 minutes.

Lockouts due to detected internal control faults will reset after 60 minutes or power interruption.

High temperature limit switch

If the high temperature limit switch is open the control will run the inducer, de-energize the gas valve, and flash "6" on the LED. When the high temperature switch closes, the control will restart the ignition sequence beginning with pre-purge.

If the high temperature limit is open for more than 6 minutes continuously during a call for heat, it is assumed that the main blower has failed and the control shall enter a hard lockout and flash a "9" on the LED. During the hard lockout, the control will continue to run the inducer as long as the limit switch is open. If the limit switch recloses in this hard lockout condition, the inducer will run a post purge and then shutoff. The control shall remain locked out until power is removed and shall not reset automatically.

Roll-out switch

If the roll-out switch opens for more than 0.25 seconds, the ICB will run the inducer for a post-purge period, immediately de-energize the gas valve, and flash "7" on the LED.

If the roll-out switch closes, the control shall remain locked out until power removed or "W" is removed. Rollout switch lockout shall not reset automatically.

Power interruptions

Power interruptions less than 0.80 seconds shall not cause the ICB to interrupt the heat sequence. Power interruptions over 0.250 seconds will cause the control reset lockout and ignition trial counters. Power interruptions of any duration shall not cause lockout or any operation requiring manual intervention.

Flame present with Gas off

If flame is sensed for longer than 2.0 seconds during a period when the gas valve should be closed, the ICB will enter lockout. The control will turn on the inducer blower while the flame is present.

Welded gas valve relay response

If either or both Main and 2nd Stage Gas valve outputs are sensed to be off for more than 1 second when commanded to be **ON** the ICB shuts off all outputs and enters lockout.

If the Main valve output is sensed to be energized for more than 1 second when commanded to be off, the control de-energizes the induced draft motor (if flame is not present) to attempt to open the pressure switch to de-energize the gas valve. If the Main gas valve is still sensed as energized after the inducer has been off for 15 seconds, the control re-energizes the inducer to attempt to vent the unburned gas. In either case, the control locks out.

Start-Up (Cooling)

Prestart Check List

After installation has been completed:

1. Check the electrical supply voltage being supplied. Be sure that it is the same as listed on the unit nameplate.
2. Set the room thermostat to the off position.
3. Turn unit electrical power on.
4. Set the room thermostat fan switch to on.
5. Check indoor blower rotation.
   - If blower rotation is in the wrong direction. Refer to Phasing Section in general information section.

   Check blower drive belt tension.

6. Check the unit supply air (CFM).
7. Measure evaporator fan motor's amp draw.
8. Set the room thermostat fan switch to off.
9. Turn unit electrical power off.

Operating Instructions

1. Turn unit electrical power on.

NOTE: Prior to each cooling season, the crankcase heaters where equipment must be energized at least 10 hours before the system is put into operation.

2. Set the room thermostat setting to lower than the room temperature.
3. First stage compressors will energize after the built-in time delay (five minutes).

Post Start Check List

1. Verify proper system pressures.
2. Measure the temperature drop across the evaporator coil.

Start-Up (Gas Heat)

Pre-Start Check List

Complete the following checks before starting the unit.

1. Check the type of gas being supplied. Be sure that it is the same as listed on the unit nameplate.
2. Make sure that the vent outlet and combustion air inlet are free of any debris or obstruction.

Operating Instructions

⚠ CAUTION

This furnace is equipped with an automatic re-ignition system. DO NOT attempt to manually light the pilot.

Lighting The Main Burners

1. Turn “OFF” electric power to unit.
2. Turn room thermostat to lowest setting.
3. Turn gas valve switch to “ON” position (See Figure 25).
4. Turn “ON” electric power to unit.
5. If thermostat set temperature is above room temperature, the main burners will ignite.

Post Start Checklist

After the entire control circuit has been energized and the heating section is operating, make the following checks:

1. Check for gas leaks in the unit piping as well as the supply piping.

⚠WARNING

FIRE OR EXPLOSION HAZARD

Failure to follow the safety warning exactly could result in serious injury, death or property damage.

Never test for gas leaks with an open flame. use a commercially available soap solution made specifically for the detection of leaks to check all connections. A fire or explosion may result causing property damage, personal injury or loss of life.

2. Check for correct manifold gas pressures. (See CHECKING GAS INPUT.)
3. Check the supply gas pressure. It must be within the limits shown on the rating nameplate. Supply pressure should be checked with all gas appliances in the building at full fire. At no time should the standby gas pressure exceed 10.5 in. or the operating pressure drop below 4.5 in for natural gas units. If gas pressure is outside these limits, contact the local gas utility or propane supplier for corrective action.

Shut Down

1. Set the thermostat to the lowest temperature setting.
2. Turn “OFF” all electric power to unit.
3. Open gas heat access panel.
4. Turn gas valve switch to “OFF” position (See Figure 25).

Checking Gas Heat Input

Two Stage Gas Heat

This unit has two stages of gas heat. First stage input is considered the minimum input for the furnace. The intended input for each furnace is shown in Table 26. The table applies to units operating on 60 Hz power only.

To determine the rate of gas flow (Second Stage).

1. Turn off all other gas appliances connected to the gas meter.
2. Turn on the furnace and make sure the thermostat is calling for Second stage (100% input) heat.
3. Measure the time needed for one revolution of the hand on the lowest increment dial on the meter. A typical gas meter has a 1/2 or a 1 cubic foot test dial.
4. Using the number of seconds it takes for one revolution of the dial, calculate the cubic feet of gas consumed per hour. (See example below).
5. If necessary, adjust the high pressure regulator as discussed in the section “Manifold Gas Pressure Adjustment”. **Be sure not to over-fire the furnace on second stage.** If in doubt, it is better to leave the second stage of the furnace slightly under-fired. Repeat Steps 1-5.

To determine the rate of gas flow (First Stage)

1. Turn off all other gas appliances connected to the gas meter.

2. Turn on the furnace and make sure the thermostat is calling for first stage heat.
3. Even when the thermostat is calling for first stage heat, the unit will light on second stage and will run on second stage for 1 minute. Allow this one-minute time period to expire and be certain the unit is running on first stage.
4. Measure the time needed for one revolution of the hand on the lowest increment dial on the meter. A typical gas meter has a 1/2 or a 1 cubic foot test dial.
5. Using the number of seconds it takes for one revolution of the dial, calculate the cubic feet of gas consumed per hour (See example below).
6. If necessary, adjust the low pressure regulator as discussed in the section "Manifold Gas Pressure Adjustment". **Be sure not to under-fire the furnace on first stage.** If in doubt, it is better to leave the first stage of the furnace slightly over-fired (Refer to Table 26 for input value.). Repeat Steps 1-6.

Table 22: Gas Rate Cubic Feet Per Hour

Seconds for One Rev.	Size of Test Dial	
	1/2 cu. ft.	1 cu. ft.
10	180	360
12	150	300
14	129	257
16	113	225
18	100	200
20	90	180
22	82	164
24	75	150
26	69	138
28	64	129
30	60	120
32	56	113
34	53	106
36	50	100
38	47	95
40	45	90
42	43	86
44	41	82
46	39	78
48	37	75
50	36	72
52	35	69
54	34	67
56	32	64
58	31	62
60	30	60

NOTE: To find the Btu input, multiply the number of cubic feet of gas consumed per hour by the Btu content of the gas in your particular locality (contact your gas company for this information as it varies widely from area to area).

EXAMPLE

By actual measurement, it takes 19 seconds for the hand on a 1 cubic foot dial to make a revolution with a 200,000 Btuh furnace running. To determine rotations per minute, divide 60 by 19 = 3.16. To calculate rotations per hour, multiply 3.16 • 60 = 189.6. Multiply 189.6 • 1 (0.5 if using a 1/2 cubic foot dial) = 189.6. Multiply 189.6 • (the Btu rating of the gas). For this example, assume the gas has a Btu rating of 1050 Btu/ft.^{3}. The result of 199,000 Btuh is within 2% of the 200,000 Btuh rating of the furnace.

Manifold Gas Pressure Adjustment

Two Stage

This gas furnace has two heat stages. Therefore, the gas valve has two adjustment screws located under two cover screws. The second stage adjustment screw is adjacent to the "HI" marking on the valve and the first stage adjustment screw is located adjacent to the "LO" marking on the valve (See Figure 25).

Manifold pressure adjustment procedure.

Adjust second stage (Refer to Table 26 for input value.) pressure first, then adjust first stage (Refer to Table 26 for input value.) pressure.

1. Turn off all power to the unit.
2. Using the outlet pressure port on the gas valve, connect a manometer to monitor the manifold pressure.
3. Remove cover screws covering HI and LO pressure adjustment screws.
4. Turn on power to the unit.
5. Set thermostat to call for second stage heat and start furnace.
6. If necessary, using a screwdriver, turn the second stage adjustment screw (adjacent to the “HI” marking on the valve) clockwise to increase manifold pressure or counterclockwise to decrease manifold pressure.
7. After the high manifold pressure has been checked, adjust the thermostat to call for first stage heat.
8. If necessary, using a screwdriver, turn the first stage adjustment screw (adjacent to the “LO” marking on the valve) clockwise to increase manifold pressure or counterclockwise to decrease manifold pressure.
9. Once pressure has been checked, replace the cover screws covering the HI and LO pressure adjustment screws.

Table 23: Gas Heat Stages

Model (Size)	Gas Heat Description	Opt.	# of Burner Tubes	1st Stage Input (Mbh)	2nd Stage Input (Mbh)	Total Input (Mbh)
ZX08 (7.5)	Low	D	3	90	125	125
	Med	E	4	125	180	180
	High	F	5	176	220	220
ZX09 (8.5)	Low	D	3	90	125	125
	Med	E	4	125	180	180
	High	F	5	176	220	220
ZX12 (10)	Low	D	4	125	180	180
	Med	E	5	176	220	220
	High	F	5	200	250	250
ZX14 (12.5)	Low	D	4	125	180	180
	Med	E	5	176	220	220
	High	F	5	200	250	250

Adjustment Of Temperature Rise

The temperature rise (the difference of temperature between the return air and the heated air from the furnace) must lie within the range shown on the unit rating plate and the data in Table 8.

After the temperature rise has been determined, the CFM can be calculated as follows:

$$CFM = \text{Btu Input} \cdot \frac{0.8}{(1.08 \cdot \Delta°F)}$$

After about 20 minutes of operation, determine the furnace temperature rise. Take readings of both the return air and the heated air in the ducts (about 6 feet from the furnace) where they will not be affected by radiant heat. Increase the blower CFM to decrease the temperature rise; decrease the blower CFM to increase the rise (See SUPPLY AIR DRIVE ADJUSTMENT).

NOTE: Each gas heat exchanger size has a minimum allowable CFM. Below this CFM, the limit will open.

Burners/Orifices Inspection/Servicing

Before checking or changing burners or orifices, CLOSE MAIN MANUAL SHUT-OFF VALVE AND SHUT OFF ALL POWER TO THE UNIT.

1. Open the union fitting just upstream of the unit gas valve and downstream from the main manual shut-off valve in the gas supply line.
2. Remove the screws holding each end of the manifold to the manifold supports.
3. Disconnect wiring to the gas valve. Remove the manifold & gas valve assembly. Orifices can now be inspected and/or replaced.

To service burners, complete step 4.

4. Remove the heat shield on top of the manifold supports. Burners are now accessible for inspection and/or replacement.

NOTE: Reverse the above procedure to replace the assemblies.

Make sure that burners are level and seat at the rear of the gas orifice.

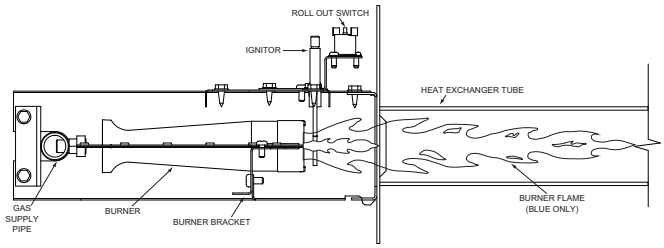

Figure 24: Typical Flame

NOTE: installation of this furnace at altitudes above 2000 ft (610 m) shall be in accordance with local codes, or in the absence of local codes, the National Fuel Gas Code, ANSI Z223.1/NFPA 54 or National Standard of Canada, Natural Gas and Propane Installation Code, CSA B149.1.

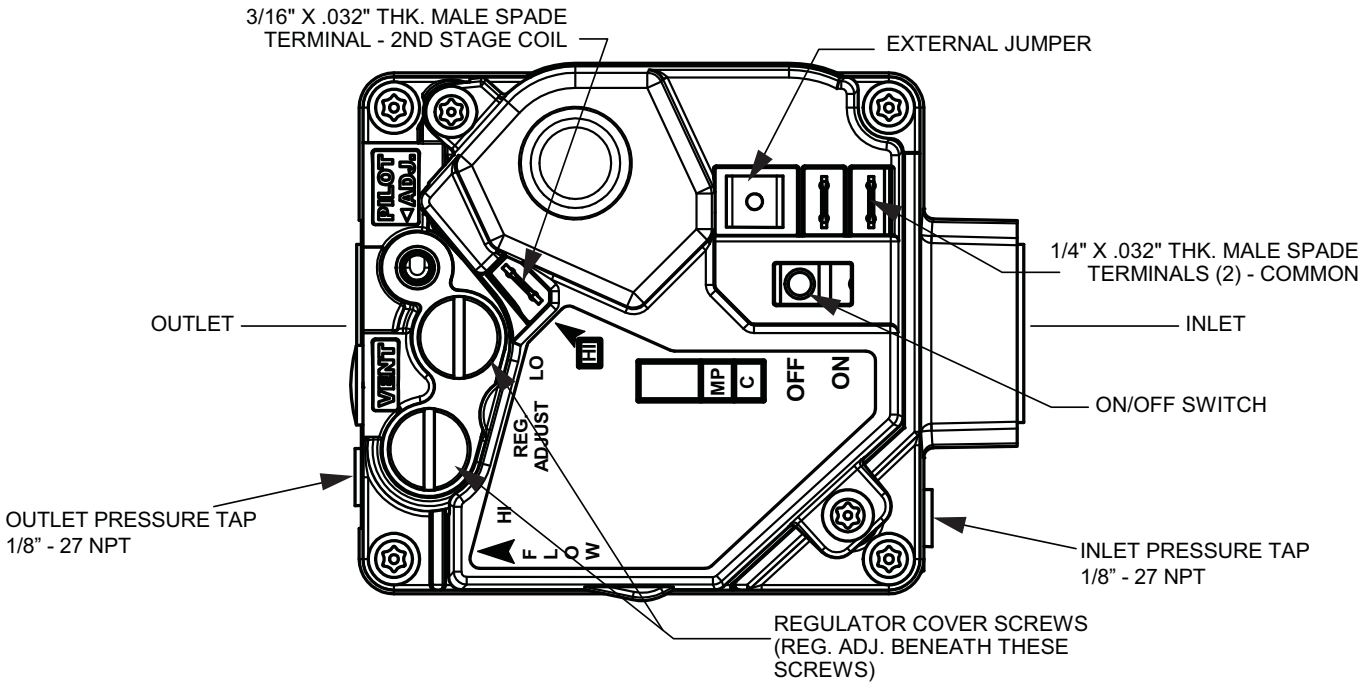

Figure 25: 7.5 Thru 12.5 Ton 3/4" Two Stage Gas Valve

Troubleshooting

⚠WARNING

Troubleshooting of components may require opening the electrical control box with the power connected to the unit. **Use extreme care when working with live circuits!** Check the unit nameplate for the correct line voltage and set the voltmeter to the correct range before making any connections with line terminals.

When not necessary, shut off all electric power to the unit prior to any of the following maintenance procedures so as to prevent personal injury.

⚠ CAUTION

Label all wires prior to disconnection when servicing controls. Wiring errors can cause improper and dangerous operation, which could cause injury to person and/or damage unit components. Verify proper operation after servicing.

⚠WARNING

The furnace may shut down on a high temperature condition during the procedure. If this occurs, the UCB energize the supply air blower motor until the high temperature limit has reset. Caution should be used at all times as the supply air blower may energize regardless of the room thermostat fan switch position.

Table 24: Flash Codes for the Gas Heat Ignition Control Board

Flash Code	Description	Technician Corrective Action	Ignition Control Response to Flash Code	Method for Reset
Heartbeat	*Normal Operation* - no staus or error information currently needs to be displayed	None.	All functions available to respond to heating demand.	None.
Steady Off	a. *No Power to the Control* - Less than 18 VAC is present at the ignition control's R (P2-2 pin) and C (P2-1 pin) connections	Verify line voltage is present at the primary of the 75VA transformer, verify 24 VAC is present at the secondary of the 75VA transformer. Verify 24 VAC is present from the UCB's C to SD terminals indicating the 3.2A control circuit breaker and phase monitor contacts are closed. Verify 24 VAC is present at the ignition control's R (P2-2 pin) and C (P2-1 pin) connections indicating the unit to ignition control wiring is intact.	The output relay contacts open so inducer and gas valve operation is not permitted.	a. Restoration of 24 VAC power to the ignition control.
	b. The ignition control has catastrophic damage that will not allow the LED display (it is likely that there will be visible physical evidence of the damage)			b. None.
Steady On	The Ignition Control's Microprocessor Has Not Passed its Self-check	Cycle power to the control to eliminate the possibility that transient voltage conditions such as surges, brownouts, etc. have not created a false indication. If the steady on LED indication repeats, the control will need to be replaced and potential causes for failure, such as excessive voltage, RF interference, etc. should be investigated.	The output relay contacts open so inducer and gas valve operation is not permitted.	Cycling 24 VAC power to the ignition control or expiration of the 60 minute "watchdog" timer.
2 Flashes	*The Induced Draft Pressure Switch Did Not Close* - 24 VAC was not received to the ignition control's pressure switch input (P1-8 pin) within 10 seconds of the ignition control energizing the induced draft motor or 24 VAC was later lost to the control's pressure switch input while the ignition control energized the induced draft motor	Verify that the induced draft motor is operable, the ignition control's L1 to IND contacts are not open, the induced draft blower wheel is intact and there are no blockages in the combustion air / induced draft path. Verify that the induced draft pressure switch sensing tubing is intact. With an incline manometer, digital manometer or Magnehelic® gauge teed into the pressure switch sensing line verify that the negative pressure exceeds the setting listed on the induced draft pressure switch label and the switch's contacts correctly close at the setting listed	Gas valve operation is not permitted/ends when the induced draft pressure switch input is not present. The ignition control's L1 to IND output relay contact will cycle closed for 5 minutes/open for 30 seconds until 24 VAC is received to the pressure switch input or the heating demand ends.	Closure of the pressure switch (24 VAC input to P1-8 pin), cycling first stage heat input or cycling 24 VAC power to the ignition control.

Table 24: Flash Codes for the Gas Heat Ignition Control Board

Flash Code	Description	Technician Corrective Action	Ignition Control Response to Flash Code	Method for Reset
3 Flashes	*The Induced Draft Pressure Switch is Stuck Closed* - 24 VAC is received to the control's pressure switch input (P1-8 pin) at the same time as 24 VAC to initiate heating operation is received at the control's W1 input (P2-3 pin)	Verify that the induced draft pressure switch contacts are not stuck or welded closed. Verify that the ignition control's L1 to IND contacts are not stuck or welded closed causing the induced draft motor to run continuously. Verify that the wiring from the ignition control's P1-3 pin through the induced draft pressure switch to the ignition control's pressure switch input (P1-8 pin) is not shorted.	The output relay contacts open so inducer and gas valve operation is not permitted.	Opening of the pressure switch (loss of 24 VAC input to P1-8 pin) then cycling first stage heat input or cycling 24 VAC power to the ignition control.
4 Flashes	*Flame Could Not Be Established* - A flame signal of 0.2µa or greater could not be established in three consecutive attempts for ignition at the initiation of the heating cycle	Verify that the unit has proper electrical grounding. Verify the 24 VAC common and ignition control cabinet ground references are intact. Monitor the flame signal. Verify that combustion air openings are without blockages and that the unit has proper clearance to the structure and adjacent units. Verify that the burners are clean and without blockages that could interfere with gas flow. Verify that the ignitor sparks with an ≈1/8" gap to the crossover area of the left burner. Verify that the flame sensor is intact and positioned with an ≈1/8" gap to the right burner. Verify that the gas lines have been purged of air and provide proper gas inlet pressure. Verify that the gas valve is opening and adjusted to provide proper manifold pressure. Verify that the wiring to the gas valve is intact. Verify that there is no wind, rain or snow entering the heat compartment to interfere with ignition or the burners. Verify that there are no conditioned air leaks or heat exchanger breaches to interfere with ignition or the burners.	Immediately after the third ignition trial: the gas valve output relay contact opens so gas valve operation is not permitted, following a 5 second inducer post purge the induced draft output relay contact opens so inducer operation is not permitted.	Cycling first stage heat input, cycling 24 VAC power to the ignition control or expiration of the 60 minute "watchdog" timer.
5 Flashes	*Flame Loss* - After being established during ignition trials, flame signal dropped below 0.2µa five times during one heating cycle	Verify that the unit has proper electrical grounding. Verify the 24 VAC common and ignition control cabinet ground references are intact. Monitor the flame signal. Verify that combustion air openings are without blockages and that the unit has proper clearance to the structure and adjacent units. Verify that the burners are clean and without blockages that could interfere with gas flow. Verify that the flame sensor is intact and positioned with an ≈1/8" gap to the right burner. Verify that the gas lines have been purged of air and provide proper gas inlet pressure. Verify that the gas valve provides proper manifold pressure. Verify that the wiring to the gas valve is intact. Verify that there is no wind, rain or snow entering the heat compartment to interfere with ignition or the burners. Verify that there are no conditioned air leaks or heat exchanger breaches to interfere with ignition or the burners.	Immediately after the fifth flame loss: the gas valve output relay contact opens so gas valve operation is not permitted, following a 5 second inducer post purge the induced draft output relay contact opens so inducer operation is not permitted.	Cycling first stage heat input, cycling 24 VAC power to the ignition control or expiration of the 60 minute "watchdog" timer.
6 Flashes	*Open Limit* - 24 VAC has been lost to the control's limit switch input (P1-9 pin) or 24 VAC has been lost to the control's limit switch input (P1-9 pin) for a duration of 6 minutes or less with 24 VAC present at the control's W1 input (P2-3 pin)	Verify proper gas manifold pressure. Correct the inadequate indoor airflow condition. Verify filters, indoor coil and blower wheel are clean. Verify that the blower belt is properly maintained and adjusted; the blower motor fuses are intact, contactor and motor are operable and wheel has the correct rotation. Verify that the ducting is not restrictive. Verify indoor air volume is at least the minimum required for the heat section by using the Airflow Measurement Charts in the Technical Training Manual or other method such as temperature rise, balometer, etc. Verify heating mode blower on/off delays are proper for the heat type and provide adequate heat section cooling at the termination of the heating cycle. Verify wiring for main and auxiliary limit switches is intact.	The gas valve output relay contact opens so gas valve operation is not permitted, the induced draft output relay contact closes to operate the inducer.	Closure of the limit switch(es) (24 VAC input to P1-9 pin)
7 Flashes	*Open Rollout* - 24 VAC has been lost to the control's rollout switch input (P1-6 pin)	Verify that combustion air openings are without blockages and that the unit has proper clearance to the structure and adjacent units. Verify that the burners are clean and without blockages that could interfere with gas flow. Verify that the ignitor sparks with an ≈1/8" gap to the crossover area of the left burner. Verify that the gas lines provide proper gas inlet pressure. Verify that the gas valve is adjusted to provide proper manifold pressure. Verify that there is no wind, rain or snow entering the heat compartment to interfere with ignition or the burners. Verify that there are no conditioned air leaks or heat exchanger breaches to interfere with ignition or the burners. Verify wiring for the rollout switch is intact.	The gas valve output relay contact opens so gas valve operation is not permitted, following a 5 second inducer post purge the induced draft output relay contact opens so inducer operation is not permitted.	Closure of the rollout switch (24 VAC input to P1-6 pin) then cycling first stage heat input or cycling 24 VAC power to the ignition control.

Table 24: Flash Codes for the Gas Heat Ignition Control Board

Flash Code	Description	Technician Corrective Action	Ignition Control Response to Flash Code	Method for Reset
8 Flashes	*The Gas Valve Failed To Shut Off* - flame has been sensed for longer than 2 seconds when the first stage gas valve output is off	Verify that the gas valve is not slow to shut off, leaks by or otherwise does not completely shut off gas flow when de-energized. Verify the gas valve wiring to is intact and not shorted in a manner that would improperly allow 24 VAC from another circuit to be applied to the gas valve.	The gas valve output relay contact opens so gas valve operation is not permitted, the induced draft output relay closes to operate the inducer.	Cycling 24 VAC power to the ignition control.
9 Flashes	*Indoor Airflow Failure Open Limit* - 24 VAC has been lost to the control's limit switch input (P1-9 pin) for a duration of more than 6 minutes with 24 VAC present at the control's W1 input (P2-3 pin)	Correct the no/extremely low indoor airflow condition. Verify filters, indoor coil and blower wheel are clean. Verify that the blower belt is intact, properly maintained and adjusted; the blower motor fuses are intact, contactor and motor are operable and wheel has the correct rotation. Verify that the ducting is without blockages. Verify indoor air volume is at least the minimum required for the heat section by using the Airflow Mesurement Charts in the Technical Training Manual or other method such as temperature rise, balometer, etc. Verify wiring for main and auxiliary limit switches is intact. Verify main and auxiliary limit switches are not failed in an open position.	The gas valve output relay contact opens so gas valve operation is not permitted, the induced draft output relay contact closes to operate the inducer.	Cycling 24 VAC power to the ignition control.
10 Flashes	a. *Gas Valve Miss-wire* - 24 VAC has been present for longer than 1 second at the first stage and/or second stage gas valve output (P1-7 pin and/or P1-4 pin) when the gas valve is commanded off by the ignition control b. *Ignition Control Gas Valve Relay Contact Failed to Close* - 24 VAC has not been sensed for longer than 1 second at the first stage and/or second stage gas valve output (P1-7 pin and/or P1-4 pin) when the gas valve is commanded on by the ignition control	Verify gas valve wiring from the ignition control to the gas valve is intact and not shorted in a manner that would improperly allow 24 VAC from another circuit to be applied to the control's P1-7 and/or P1-4 gas valve output pins. Verify the control's gas valve output relay contacts for first stage (P1-8 to P1-7) and second stage (P1-7 to P1-4) are not shorted or fail to close when commanded on.	Initally, the output relay contacts open. Then, if 24 VAC remains present at the P1-7 pin after 15 seconds, the induced draft output relay contact closes to operate the inducer.	Cycling 24 VAC power to the ignition control.

Table 25: ZX08 Charging Table System 1

Air Flow Indoor Db/Wb	Outdoor DB	Suction P	Suction Temp.	Liquid P	Liquid Temp.	Delta T Db	Compr. amps
300 Cfm/Ton 80/62	75	128	63	271	78	-24	6.1
	85	131	57	313	90	-25	6.8
	95	134	52	355	102	-26	7.6
300 Cfm/Ton 80/67	75	129	65	270	77	-25	6.2
	85	134	61	314	88	-24	6.9
	95	139	56	357	99	-23	7.6
300 Cfm/Ton 80/72	75	130	67	269	77	-25	6.3
	85	137	64	315	87	-22	7.0
	95	145	61	360	97	-20	7.7
300 Cfm/Ton 75/62	75	124	57	267	79	-22	6.1
	85	128	52	310	90	-22	6.8
	95	132	48	354	102	-22	7.6
400 Cfm/Ton 80/62	75	130	67	273	77	-22	6.2
	85	135	63	316	89	-22	6.9
	95	140	59	359	100	-22	7.7
400 Cfm/Ton 80/67	75	132	68	274	77	-21	6.3
	85	138	65	317	88	-21	7.0
	95	143	62	360	99	-20	7.7
400 Cfm/Ton 80/72	75	134	70	276	77	-21	6.3
	85	140	67	319	87	-20	7.0
	95	147	65	362	97	-18	7.8
400 Cfm/Ton 75/62	75	127	62	270	78	-20	6.1
	85	132	58	314	89	-19	6.9
	95	137	54	357	100	-19	7.7

Table 26: ZX08 Charging Table System 2

Air Flow Indoor Db/Wb	Outdoor DB	Suction P	Suction Temp.	Liquid P	Liquid Temp.	Delta T Db	Compr. amps
300 Cfm/Ton 80/62	75	130	64	281	79	-24	6.3
	85	134	58	326	89	-25	7.0
	95	138	51	371	100	-26	7.8
300 Cfm/Ton 80/67	75	131	65	283	79	-25	6.4
	85	138	61	331	89	-24	7.2
	95	145	57	379	100	-23	7.9
300 Cfm/Ton 80/72	75	132	65	285	79	-25	6.5
	85	142	64	336	90	-22	7.3
	95	152	64	388	100	-20	8.0
300 Cfm/Ton 75/62	75	127	59	278	78	-22	6.2
	85	132	54	323	89	-22	7.0
	95	136	49	368	99	-22	7.8
400 Cfm/Ton 80/62	75	135	68	288	79	-22	6.4
	85	140	64	334	89	-22	7.2
	95	145	60	380	100	-22	8.0
400 Cfm/Ton 80/67	75	135	68	289	79	-21	6.5
	85	142	65	338	90	-21	7.3
	95	149	62	387	100	-20	8.1
400 Cfm/Ton 80/72	75	134	69	289	79	-21	6.6
	85	144	67	341	90	-20	7.4
	95	154	65	393	101	-18	8.2
400 Cfm/Ton 75/62	75	131	63	284	79	-20	6.3
	85	136	60	329	89	-19	7.1
	95	142	56	375	100	-19	7.9

Table 27: ZX09 Charging Table System 1

Air Flow Indoor Db/Wb	Outdoor DB	Suction P	Suction Temp.	Liquid P	Liquid Temp.	Delta T Db	Compr. amps
300 Cfm/Ton 80/62	75	128	62	290	78	-25	8.8
	85	130	56	332	88	-25	9.6
	95	132	51	374	98	-26	10.4
300 Cfm/Ton 80/67	75	129	61	290	77	-25	8.8
	85	134	59	335	88	-24	9.7
	95	138	56	381	98	-23	10.6
300 Cfm/Ton 80/72	75	130	61	290	77	-25	8.8
	85	137	61	339	88	-23	9.8
	95	145	62	388	98	-21	10.8
300 Cfm/Ton 75/62	75	125	57	287	78	-23	8.8
	85	127	52	330	88	-22	9.6
	95	130	48	373	98	-22	10.4
400 Cfm/Ton 80/62	75	131	66	293	78	-22	8.8
	85	135	63	337	88	-22	9.6
	95	139	59	380	98	-22	10.4
400 Cfm/Ton 80/67	75	132	67	295	78	-21	8.8
	85	137	64	340	88	-21	9.7
	95	142	62	384	98	-20	10.5
400 Cfm/Ton 80/72	75	133	67	296	78	-20	8.8
	85	140	66	342	88	-19	9.7
	95	146	65	389	98	-19	10.7
400 Cfm/Ton 75/62	75	128	62	291	78	-19	8.8
	85	132	58	334	88	-19	9.6
	95	136	54	378	98	-19	10.4

Table 28: ZX09 Charging Table System 2

Air Flow Indoor Db/Wb	Outdoor DB	Suction P	Suction Temp.	Liquid P	Liquid Temp.	Delta T Db	Compr. amps
300 Cfm/Ton 80/62	75	127	64	290	79	-25	8.6
	85	130	59	332	88	-25	9.5
	95	132	53	374	98	-26	10.3
300 Cfm/Ton 80/67	75	127	64	289	78	-25	8.5
	85	132	61	334	88	-24	9.4
	95	137	57	379	99	-23	10.3
300 Cfm/Ton 80/72	75	127	63	288	78	-25	8.4
	85	134	62	336	88	-23	9.4
	95	141	61	385	99	-21	10.4
300 Cfm/Ton 75/62	75	123	60	287	79	-23	8.6
	85	127	54	329	89	-22	9.4
	95	130	49	372	98	-22	10.2
400 Cfm/Ton 80/62	75	130	68	294	79	-22	8.7
	85	134	64	337	89	-22	9.5
	95	138	61	380	98	-22	10.4
400 Cfm/Ton 80/67	75	130	68	296	79	-21	8.7
	85	136	66	340	89	-21	9.5
	95	141	63	384	99	-20	10.4
400 Cfm/Ton 80/72	75	131	69	299	79	-20	8.7
	85	137	67	343	89	-19	9.5
	95	143	66	387	99	-19	10.4
400 Cfm/Ton 75/62	75	126	64	292	79	-19	8.7
	85	131	60	335	89	-19	9.5
	95	135	56	377	98	-19	10.3

Table 29: ZX12 Charging Table System 1

Air Flow Indoor Db/Wb	Outdoor DB	Suction P	Suction Temp.	Liquid P	Liquid Temp.	Delta T Db	Compr. amps
300 Cfm/Ton 80/62	75	135	67	288	84	-25	9.0
	85	137	62	333	96	-26	10.0
	95	139	56	377	107	-27	11.0
300 Cfm/Ton 80/67	75	134	67	290	84	-25	9.1
	85	140	65	337	95	-24	10.2
	95	146	63	385	107	-23	11.3
300 Cfm/Ton 80/72	75	133	66	291	84	-25	9.2
	85	143	68	342	95	-23	10.4
	95	153	70	393	106	-20	11.6
300 Cfm/Ton 75/62	75	130	63	286	85	-23	9.0
	85	134	58	331	96	-23	10.0
	95	137	53	377	108	-23	11.0
400 Cfm/Ton 80/62	75	138	69	291	83	-22	9.1
	85	142	66	337	95	-22	10.0
	95	146	63	382	106	-22	11.0
400 Cfm/Ton 80/67	75	139	69	293	83	-22	9.1
	85	145	68	340	94	-21	10.1
	95	150	66	387	106	-21	11.2
400 Cfm/Ton 80/72	75	140	69	295	83	-22	9.1
	85	147	70	343	94	-20	10.2
	95	154	70	392	105	-19	11.3
400 Cfm/Ton 75/62	75	134	65	288	84	-20	9.0
	85	138	62	334	95	-20	10.0
	95	143	59	380	107	-19	11.0

Table 30: ZX12 Charging Table System 2

Air Flow Indoor Db/Wb	Outdoor DB	Suction P	Suction Temp.	Liquid P	Liquid Temp.	Delta T Db	Compr. amps
300 Cfm/Ton 80/62	75	132	72	291	81	-25	9.3
	85	134	69	337	94	-26	10.4
	95	136	67	383	106	-27	11.4
300 Cfm/Ton 80/67	75	132	71	293	82	-25	9.5
	85	137	70	344	94	-24	10.7
	95	143	68	394	105	-23	11.8
300 Cfm/Ton 80/72	75	133	70	296	82	-25	9.7
	85	141	70	350	94	-23	10.9
	95	149	69	405	105	-20	12.2
300 Cfm/Ton 75/62	75	128	67	289	82	-23	9.3
	85	131	65	336	94	-23	10.4
	95	135	64	384	106	-23	11.5
400 Cfm/Ton 80/62	75	135	74	295	81	-22	9.4
	85	139	74	342	93	-22	10.4
	95	143	73	388	105	-22	11.5
400 Cfm/Ton 80/67	75	137	74	296	81	-22	9.5
	85	142	74	345	93	-21	10.6
	95	147	73	394	104	-21	11.7
400 Cfm/Ton 80/72	75	138	74	298	81	-22	9.5
	85	144	74	349	92	-20	10.7
	95	151	74	401	104	-19	11.8
400 Cfm/Ton 75/62	75	132	70	292	82	-20	9.3
	85	136	70	339	93	-20	10.4
	95	140	69	386	105	-19	11.5

Table 31: ZX14 Charging Table System 1

Air Flow Indoor Db/Wb	Outdoor DB	Suction P	Suction Temp.	Liquid P	Liquid Temp.	Delta T Db	Compr. amps
300 Cfm/Ton 80/62	75	133	66	283	79	-24	11.2
	85	135	63	327	90	-25	12.3
	95	136	60	372	100	-25	13.4
300 Cfm/Ton 80/67	75	132	65	283	80	-24	11.2
	85	137	62	331	91	-23	12.5
	95	142	60	379	101	-23	13.8
300 Cfm/Ton 80/72	75	131	64	283	81	-24	11.2
	85	139	62	335	92	-22	12.7
	95	147	60	386	102	-20	14.2
300 Cfm/Ton 75/62	75	128	61	280	79	-22	11.1
	85	131	60	326	90	-22	12.3
	95	134	58	372	100	-21	13.5
400 Cfm/Ton 80/62	75	135	68	285	79	-21	11.1
	85	139	66	330	89	-21	12.3
	95	143	64	376	100	-21	13.5
400 Cfm/Ton 80/67	75	136	68	285	79	-21	11.2
	85	141	66	333	90	-20	12.5
	95	146	64	380	101	-20	13.8
400 Cfm/Ton 80/72	75	136	68	286	80	-21	11.3
	85	142	66	335	90	-19	12.7
	95	148	64	384	101	-18	14.1
400 Cfm/Ton 75/62	75	131	64	282	79	-19	11.1
	85	135	62	329	89	-18	12.3
	95	139	60	375	100	-18	13.5

Table 32: ZX14 Charging Table System 2

Air Flow Indoor Db/Wb	Outdoor DB	Suction P	Suction Temp.	Liquid P	Liquid Temp.	Delta T Db	Compr. amps
300 Cfm/Ton 80/62	75	134	64	278	79	-24	11.3
	85	135	61	326	90	-25	12.5
	95	136	58	373	100	-25	13.7
300 Cfm/Ton 80/67	75	133	63	277	80	-24	11.3
	85	137	62	327	90	-23	12.7
	95	141	60	377	100	-23	14.0
300 Cfm/Ton 80/72	75	133	63	275	80	-24	11.3
	85	140	62	328	90	-22	12.8
	95	147	61	381	101	-20	14.4
300 Cfm/Ton 75/62	75	128	59	276	79	-22	11.2
	85	130	58	325	89	-22	12.4
	95	132	57	373	99	-21	13.7
400 Cfm/Ton 80/62	75	137	66	280	80	-21	11.3
	85	140	64	328	90	-21	12.5
	95	143	62	377	100	-21	13.8
400 Cfm/Ton 80/67	75	138	66	280	80	-21	11.4
	85	142	64	329	90	-20	12.7
	95	146	62	378	101	-20	14.0
400 Cfm/Ton 80/72	75	138	66	279	80	-21	11.4
	85	143	64	330	91	-19	12.8
	95	149	63	380	101	-18	14.2
400 Cfm/Ton 75/62	75	133	61	278	80	-19	11.2
	85	136	60	327	90	-18	12.5
	95	139	59	376	100	-18	13.8

Control Board Navigation Components

The following components are needed to access the control points in the Smart Equipment™ control. Installation and operation guides are located on www.upgnet.com under Product Center \ Equipment Catalog \ Commercial Products \ Zoning Systems and Controls.

1. Local LCD on Unit Control Board.

OR

2. Mobile Access Portal (MAP) Gateway (Portable).
   - Source 1 P/N S1-JC-MAP1810-OP
   - MAP Gateway Quick Start Guide P/N 24-10737-16
   - MAP Gateway Instruction P/N 24-10737-8

NOTE: For more in-depth sequence of operation of the Smart Equipment™ control please refer to LIT-12011950 on www.upgnet.com under Product Center \ Equipment Catalog \ Commercial Products \ Zoning Systems and Controls.

SMART EQUIPMENT™ FIRMWARE VERSION 3.3 BASIC UNIT CONTROL BOARD NAVIGATION EXAMPLES:

The following document details the navigation and viewing of the LCD display screen equipped as a standard item on the Smart Equipment™ control installed within various commercial UPG packaged and split system equipment. The following information provides a step-by-step demonstration on how to navigate the basic status menu and how to change basic configuration settings. The basic navigation steps outlined in this short demonstration applies to most menus within the Smart Equipment™ control.

Understanding the Local LCD
After you apply power to your Rooftop Unit (RTU), a start-up countdown begins on the Unit Control Board (UCB) LCD. When the controller is ready, the screen is blank because no faults are present. Use the joystick and the two push buttons below the LCD, to navigate through the menus.

Step 1 - After the start-up countdown is complete the first screen displayed is the "Startup Delay" screen. Move Joystick. Scroll down to "Details" then press "ENTER".

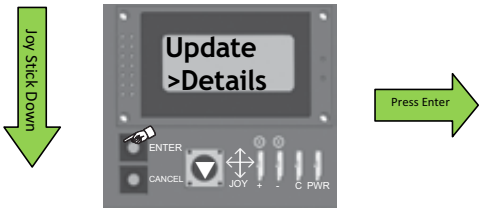

Step 2 - Scroll down to "Econ" and press "ENTER".

Step 3 - "Setup and Service" will now appear. Press "ENTER".

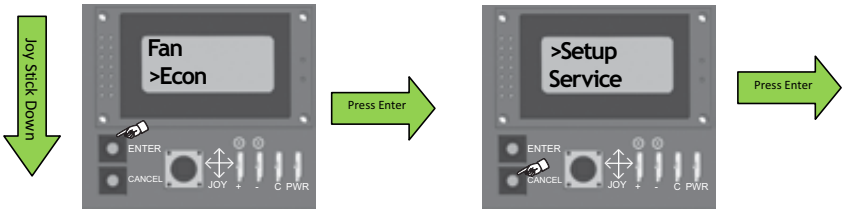

Step 4 - Scroll down to "Econ-MinPos" then press "ENTER".

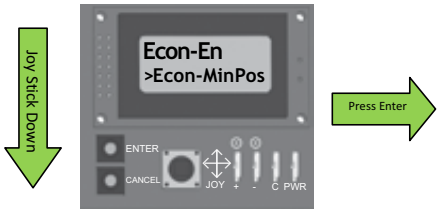

Step 5- To adjust the minimum position percentage move the joystick to the right to increase and to left decrease. Then Press "ENTER". **WAIT 5-7 SECONDS FOR VALUE ONSCREEN TO UPDATE!**

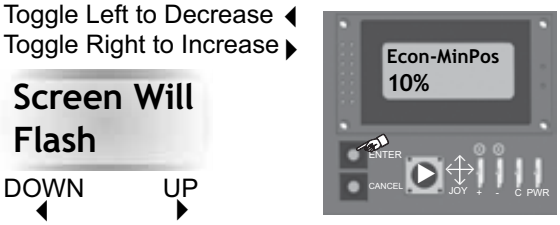

Press the "Cancel" button to exit each menu level. Repeatedly pressing "Cancel" returns the menu to the first "Status, Alarms" screen.

When the "Cancel" button is pressed multiple times to exit each menu level and the screen returns to the first "Status, Alarms" display the next demonstration can begin. In this demonstration the information below steps through the "Commissioning" menu.

Step 1 - After the start-up countdown is complete the first screen displayed is the “Startup Delay” screen. Move Joystick. Scroll down to “Details” then press “ENTER”.

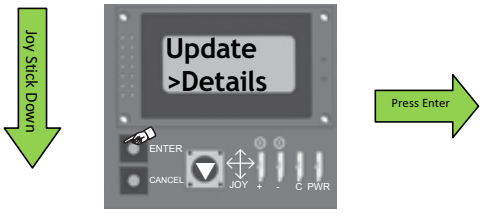

Step 2 - Scroll down to “Htg” and press “ENTER”.

Step 3 - “Setup and Service” will now appear. Press “ENTER”.

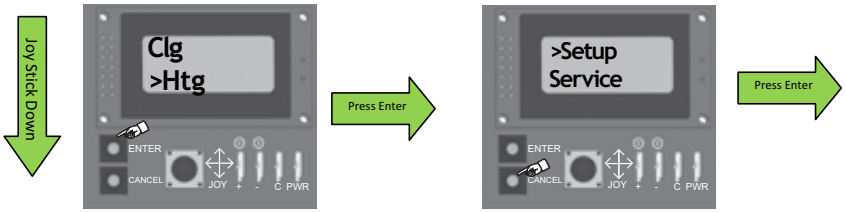

Step 4 - press “ENTER” to select “Htg-En”.

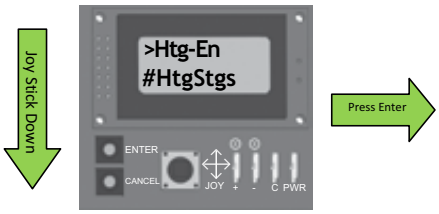

Step 5- To change the selection move the joystick to the right and choose either “YES” or “NO”. Then Press “ENTER”. **WAIT 5-7 SECONDS FOR VALUE ONSCREEN TO UPDATE!**

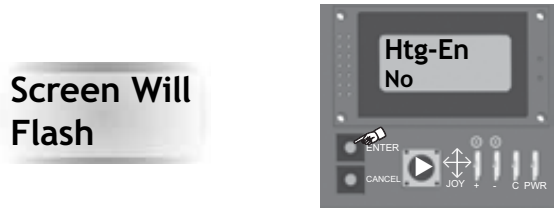

These few pages provide a simple demonstration how to navigate the menu’s of the Smart Equipment™ control containing Version 3 firmware. Please utilize this document along with the additional information in the Users Guide and detailed navigation menu to adjust the control to customer preferences or job specifications.

NOTE: IF OPERATING THE EQUIPMENT WITH A THERMOSTAT, THE UCB SETPOINTS AND PARAMETERS SHOULD NOT REQUIRE ALTERATION; HOWEVER, THERE MAY BE THE CASE WHERE MINIMUM OUTSIDE AIR, LEAD-LAG OR OTHER CUSTOM SETTINGS ARE REQUIRED. PLEASE READ THIS DOCUMENT IN DETAIL TO UNDERSTAND THE IMPLICATIONS OF MAKING CHANGES BEFORE PROCEEDING. IT IS STRONGLY RECOMMENDED THAT A BACKUP OF PARAMETER SETTINGS BE SAVED ON A USB DRIVE BEFORE MAKING ANY MAJOR CHANGES TO THE CONTROL!

Start-Up Sheet

START-UP & SERVICE DATA INSTRUCTION

COMMERCIAL PACKAGE UNITS

3.0 To 40.0 TONS

START-UP CHECKLIST

Date: _____

Job Name: _____

Customer Name: _____

Address: _____

City: _____ State: _____ Zip: _____

Model Number: _____ Serial Number: _____

Qualified Start-up Technician: _____ Signature: _____

HVAC Contractor: _____ Phone: _____

Address: _____

Contractor's E-mail Address: _____

Electrical Contractor: _____ Phone: _____

Distributor Name: _____ Phone: _____

WARRANTY STATEMENT

Johnson Controls/UPG is confident that this equipment will operate to the owner's satisfaction if the proper procedures are followed and checks are made at initial start-up. This confidence is supported by the 30 day dealer protection coverage portion of our standard warranty policy which states that Johnson Controls/UPG will cover parts and labor on new equipment start-up failures that are caused by a defect in factory workmanship or material, for a period of 30 days from installation. Refer to current standard warranty policy and warranty manual found on UPGnet for details.

In the event that communication with Johnson Controls/UPG is required regarding technical and/or warranty concerns, all parties to the discussion should have a copy of the equipment start-up sheet for reference. A copy of the original start-up sheet should be filed with the Technical Services Department.

The packaged unit is available in constant or variable air volume versions with a large variety of custom options and accessories available. Therefore, some variation in the startup procedure will exist depending upon the products capacity, control system, options and accessories installed.

This start-up sheet covers all startup check points common to all package equipment. In addition it covers essential startup check points for a number of common installation options. Depending upon the particular unit being started not all sections of this startu sheet will apply. Complete those sections applicable and use the notes section to record any additional information pertinent to you particular installation.

Warranty claims are to be made through the distributor from whon the equipment was purchased.

EQUIPMENT STARTUP

Use the local LCD or Mobile Access Portal (MAP) Gateway to complete the start-up.

A copy of the completed start-up sheet should be kept on file by the distributor providing the equipment and a copy sent to

Johnson Controls/UPG
Technical Services Department
5005 York Drive
Norman, OK 73069

SAFETY WARNINGS

The inspections and recording of data outlined in this procedure are required for start-up of Johnson Controls/UPG's packaged products. Industry recognized safety standards and practices must be observed at all times. General industry knowledge and experience are required to assure technician safety. It is the responsibility of the technician to assess all potential dangers and take all steps warranted to perform the work in a safe manner. By addressing those potential dangers, prior to beginning any work, the technician can perform the work in a safe manner with minimal risk of injury.

⚠WARNING

Lethal voltages are present during some start-up checks. Extreme caution must be used at all times.

⚠WARNING

Moving parts may be exposed during some startup checks. Extreme caution must be used at all times.

NOTE: Read and review this entire document before beginning any of the startup procedures.

DESIGN APPLICATION INFORMATION

This information will be available from the specifying engineer who selected the equipment. If the system is a VAV system the CFM will be the airflow when the remote VAV boxes are in the full open position and the frequency drive is operating at 60 HZ. **Do not proceed with the equipment start-up without the design CFM information.**

Design Supply Air CFM: _____ Design Return Air CFM:_____

Design Outdoor Air CFM At Minimum Position: _____

Total External Static Pressure: _____

Supply Static Pressure: _____

Return Static Pressure: _____

Design Building Static Pressure: _____

Outside Air Dilution: Economizer Position Percentage: _____ CFM: _____

Supply Gas Pressure After Regulator W/o Heat Active _____ Inches_____

ADDITIONAL APPLICATION NOTES FROM SPECIFYING ENGINEER:

REFERENCE

General Inspection	Completed	See Notes
Unit inspected for shipping, storage, or rigging damage	☐	☐
Unit installed with proper clearances	☐	☐
Unit installed within slope limitations	☐	☐
Refrigeration system checked for gross leaks (presence of oil)	☐	☐
Terminal screws and wiring connections checked for tightness	☐	☐
Filters installed correctly and clean	☐	☐
Economizer hoods installed in operating position	☐	☐
Condensate drain trapped properly, refer to Installation Manual	☐	☐
Economizer damper linkage tight	☐	☐
Gas Heat vent hood installed	☐	☐
All field wiring (power and control) complete	☐	☐

Air Moving Inspection	Completed	See Notes
Alignment of drive components	☐	☐
Belt tension adjusted properly	☐	☐
Blower pulleys tight on shaft, bearing set screws tight, wheel tight to shaft	☐	☐
Pressure switch or transducer tubing installed properly	☐	☐

Exhaust Inspection Powered ☐ Barometric Relief ☐	Completed	See Notes
Check hub for tightness	☐	☐
Check fan blade for clearance	☐	☐
Check for proper rotation	☐	☐
Check for proper mounting (screen faces towards unit)	☐	☐
Prove operation by increasing minimum setting on economizer	☐	☐

Economizer Inspection Standard ☐ BAS ☐	Completed	See Notes
CO_2 sensor installed Yes ☐ No ☐	☐	☐
Check economizer setting (Reference Smart Equipment™ Control Board LCD menu location)	☐	☐
Prove economizer open/close through Smart Equipment™ Board Setting	☐	☐

Reheat Mode Normal ☐ or Alternate ☐ Not Applicable ☐
Humidity Sensor (2SH0401) _____

1034349-UCL-E-0817

Operating Measurements - Air Flow

Fan operates with proper rotation (All VFD equipped units with the optional Manual Bypass must be phased for correct blower rotation with the Bypass switch set in the LINE position) ID Fans ☐ Exh. Fans ☐ Cond. Fans ☐	
Pressure drop across dry evaporator coil (At maximum design CFM) [1]	IWC
External Static Pressure	IWC
Return Static Pressure	IWC
Supply Static Pressure	IWC
Supply Air CFM Using Dry Coil Chart	CFM
Final Adjusted Supply Air CFM[2]	CFM

1. Consult the proper airflow to pressure drop table to obtain the actual airflow at the measured pressure differential.
2. Was a motor pulley adjustment or change required to obtain the correct airflow?
   Was it necessary to increase of decrease the airflow to meet the design conditions?
   If the motor pulley size was changed, measure the outside diameters of the motor and blower pulleys and record those diameters here;

Blower Motor HP _____FLA_____ RPM_____

Pulley Pitch Diameter _____Turns Out_____ Final Turns Out_____

Blower Pulley Pitch Diameter _____ Fixed Sheave_____

ELECTRICAL DATA

T1 - T2 _____ Volts T2 - T3 _____ Volts

Control Voltage _____ Volts T1 - T3 _____ Volts

Device	Nameplate	Measured List All Three Amperages
Supply Fan Motor[1, 2]	AMPS	AMPS
Exhaust Motor (Dampers 100%)	AMPS	AMPS
Condenser Fan #1	AMPS	AMPS
Condenser Fan #2 (if equipped)	AMPS	AMPS
Condenser Fan #3 (if equipped)	AMPS	AMPS
Condenser Fan #4 (if equipped)	AMPS	AMPS
Compressor #1	AMPS	AMPS
Compressor #2 (if equipped)	AMPS	AMPS
Compressor #3 (if equipped)	AMPS	AMPS
Compressor #4 (if equipped)	AMPS	AMPS

1. VAV units with heat section - simulate heat call to drive VAV boxes and VFD/IGV to maximum design airflow position.
2. VAV units without heat section - VAV boxes must be set to maximum design airflow position.

1034349-UCL-E-0817

OPERATING MEASUREMENTS - COOLING

Stage	Discharge Pressure	Discharge Temp.	Liquid Line Temp.[1]	Subcooling[2]	Suction Pressure	Suction Temp.	Superheat
First	#	°	°	°	#	°	°
Second (if equipped)	#	°	°	°	#	°	°
Third (if equipped)	#	°	°	°	#	°	°
Fourth (if equipped)	#	°	°	°	#	°	°
Reheat 1st Stage	#	°	°	°	#	°	°

1. Liquid temperature should be taken before filter/drier.
2. Subtract 10 psi from discharge pressure for estimated liquid line pressure

Outside air temperature	_____	°F db	_____	°F wb	_____ %RH
Return Air Temperature	_____	°F db	_____	°F wb	_____ %RH
Mixed Air Temperature	_____	°F db	_____	°F wb	_____ %RH
Supply Air Temperature	_____	°F db	_____	°F wb	_____ %RH

REFRIGERANT SAFETIES

Action	Completed	See Notes
Prove Compressor Rotation (3 phase only) by gauge pressure	☐	☐
Prove High Pressure Safety, All Systems	☐	☐
Prove Low Pressure Safety, All Systems	☐	☐

OPERATING MEASUREMENTS - GAS HEATING

Fuel Type: ☐ Natural Gas ☐ LP Gas

Action		Completed	See Notes
Check for gas leaks		☐	☐
Prove Ventor Motor Operation		☐	☐
Prove Primary Safety Operation		☐	☐
Prove Auxiliary Safety Operation		☐	☐
Prove Rollout Switch Operation		☐	☐
Prove Smoke Detector Operation		☐	☐
Manifold Pressure	Stage 1	IWC	☐
	Stage 2 (If Equipped)	IWC	☐
	Stage 3 (If Equipped)	IWC	☐
Supply gas pressure at full fire		IWC	☐
Check temperature rise[1]	☐ measured at full fire	°F	☐

1. $\frac{\text{Input X Eff. (BTU output)}}{1.08 \text{ X Temp. Rise}}$

OPERATIONAL MEASUREMENTS - STAGING CONTROLS

Verify Proper Operation of Heating/Cooling Staging Controls	
Create a cooling demand at the Thermostat, BAS System or Smart Equipment™ Verify that cooling/economizer stages are energized.	☐
Create a heating demand at the Thermostat, BAS System or Smart Equipment™ Verify that heating stages are energized.	☐
Verify Proper Operation of the Variable Frequency Drive (If Required)	
Verify that motor speed modulates with duct pressure change.	☐

FINAL - INSPECTION

Verify that all operational control set points have been set to desired value Scroll through all setpoints and change as may be necessary to suit the occupant requirements.	☐
Verify that all option parameters are correct Scroll through all option parameters and ensure that all installed options are enabled in the software and all others are disabled in the software. (Factory software settings should match the installed options)	☐
Verify that all access panels have been closed and secured	☐
Save a backup file from the unit control board onto a USB flash drive.	☐

OBSERVED PRODUCT DEFICIENCIES & CONCERNS:

Subject to change without notice. Printed in U.S.A.
Copyright © 2017 by Johnson Controls, Inc. All rights reserved.

1193253-UIM-L-0118
Supersedes: 1193253-UIM-K-0317

York International Corporation
5005 York Drive
Norman, OK 73069